TABLE OF CONTENTS

I. GENERAL 1
- 1-1 Purpose 1
- 1-2 Legal Authority 1
- 1-3 Severability 1
- 1-4 Definitions 2

II. LICENSURE 5
- 2-1 Requirement for Licensure 5
- 2-2 Types of Licenses 5
- 2-3 Application for License 7
- 2-4 License Fee 7
- 2-5 Certificate of Inspection by Fire Department 8
- 2-6 Inspection 8
- 2-7 Record of Inspection 8
- 2-8 Renewal of License 8
- 2-9 License Not Transferable or Assignable 9
- 2-10 Display of Licenses 9

III. RIGHT OF ENTRY AND VIOLATIONS 9
- 3-1 Right of Entry 9
- 3-2 Violations 9

IV. FACILITY POLICY AND PROCEDURES 10
- 4-1 Parental Information 10
- 4-2 Smoking, Tobacco Products, and Prohibited Substances 12
- 4-3 Parental Access 12
- 4-4 Changes in Facility Operations 13
- 4-5 Notice of Legal Action 13
- 4-6 Posting of Information 13
- 4-7 Weapons Prohibited 13

V. PERSONNEL REQUIREMENTS 14
- 5-1 General Requirements for Personnel 14
- 5-2 Criminal Record (Fingerprinting) and Child Abuse Central Registry Checks 14
- 5-3 Child Care Director Qualifications 15
- 5-4 Care Givers 16
- 5-5 Care Giver Assistants 16
- 5-6 Students 16
- 5-7 Use of Director Designee 17
- 5-8 Staff Development 17
- 5-9 Review by Licensing Agency 19

VI. RECORDS 19
- 6-1 Records 19
- 6-2 Records Retention 19
- 6-3 Facility Records 19
- 6-4 Personnel Records 20
  - 6-4(A) Employee Records 20
  - 6-4(B) Volunteer Records (120 or more hours per year) 21
  - 6-4(C) Volunteer Records (less than 120 hours per year) 21
- 6-5 Child Records 22
- 6-6 Confidentiality of Records and Information 23

VII. REPORTS 23
7-1 Serious Occurrences Involving Children 23
7-2 Child Abuse 23
7-3 Communicable Disease 23
7-4 Infants and Toddlers 23

VIII. STAFFING 24
8-1 General 24
8-2 Ratio 24
8-3 Grouping 25

IX. PROGRAM OF ACTIVITIES 26
9-1 General 26
9-2 Daily Routines 26
9-3 Eating 26
9-4 Rest Periods 26
9-5 Outdoor Activities 26
9-6 Infant and Toddler Activities 27

X. EQUIPMENT, TOYS, AND MATERIALS 27
10-1 General 27
10-2 Playground Equipment 29
10-3 Paint 29
10-4 Chairs and Tables 29
10-5 Hooks and Compartments 29
10-6 Sand Boxes 29
10-7 Cribs 30
10-8 High Chairs 30
10-9 Rest Period Equipment 30
10-10 Play Equipment 30
10-11 School Age Programs 31

XI. BUILDINGS AND GROUNDS 31
11-1 Building 31
11-2 Indoor Square Footage 33
11-3 Openings 34
11-4 Kitchens 34
11-5 Toilets and Hand Washing Lavatories 35
11-6 Water 35
11-7 Exits 36
11-8 Heating, Cooling, and Ventilation 36
11-9 Outdoor Playground Area 37
11-10 Indoor Playground Area 39
11-11 Grounds 40
11-12 Garbage Removal 40
11-13 Environmental Health 40
11-14 Pest Control 40

XII. HEALTH, HYGIENE, AND SAFETY 40
12-1 Employee Health 40
12-2 Child Health 41
12-3 Child Hygiene 41
12-4 Toys and Equipment 42
12-5 First Aid Supply 42
12-6 Animals and Pets 44

12-7 Fire/Disaster Evacuation Drills 44

XIII. NUTRITION AND MEALS 44
13-1 General 44
13-2 Nutritional Standards 45
13-3 Refreshments 45
13-4 Sack Lunches 45
13-5 Snacks 46

XIV. DISCIPLINE AND GUIDANCE 46
14-1 Prohibited Behavior 46
14-2 Restraint of a Child 46
14-3 Time Out 47
14-4 Children Shall Not Discipline Other Children 47

XV. TRANSPORTATION 47
15-1 General 47
15-2 Requirements 47
15-3 Occupant Restraints 47
15-4 Staff-to-Child Ratio 48

XVI. DIAPERING AND TOILETING 48
16-1 Diaper Changing Area 48
16-2 Non-Disposable Diapers and Training Pants 48
16-3 Disposable Diapers 48
16-4 Potty Chairs 49
16-5 Hand washing 49
16-6 Parental Consultation 49

XVII. REST PERIODS 49
17-1 Equipment 49
17-2 Cleaning of Linens and Bed Coverings 49
17-3 Cleaning of Rest Period Equipment 49
17-4 Sharing of Rest Period Equipment 49

XVIII. FEEDING OF INFANTS AND TODDLERS 49
18-1 Hand washing 49
18-2 Bottle Feeding 50
18-3 Formula Storage 50
18-4 Baby Food 50
18-5 Refrigerator 50
18-6 Heating Unit and Microwave Use 50

XIX. SWIMMING AND WATER ACTIVITIES 50
19-1 General 50
19-2 Lifeguard Supervision 50
19-3 Health and Safety 51

XX. CHILDREN WITH SPECIAL NEEDS 53
20-1 Facility Adaptation 53
20-2 Activity Plan 53
20-3 Care giver Staff Development 53
20-4 Staffing 53

XXI. NIGHT CARE....53
21-1 General....53
21-2 Nutrition....54
21-3 Sleeping....54
21-4 Bathroom Facilities....54

XXII. SCHOOL AGE CARE....55
22-1 General....55
22-2 Enrollment....55
22-3 Indoor Square Footage....55
22-4 Nutrition....55
22-5 Transportation....56
22-6 Toilets and Hand washing Lavatories....56
22-7 Playgrounds....56

XXIII. SUMMER DAY CAMP & SCHOOL AGE PROGRAMS....56
23-1 General....56
23-2 Definition....57
23-3 Enrollment....57
23-4 Maximum Capacity....57
23-5 Summer Day Camp & School Age Program Director Qualifications....57
23-6 Care giver CPR and First Aid Certification....57
23-7 Facility Record Storage....58
23-8 Indoor Square Footage....58
23-9 Nutrition....59
23-10 Transportation....59
23-11 Toilets and Hand washing Lavatories....59
23-12 Equipment....60
23-13 Immunization Requirements....60

XXIV. HOURLY CHILD CARE....60
24-1 General....60
24-2 Definition....60
24-3 Facility Policy and Procedures....61
24-4 Personnel Requirements....61
24-5 Records and Reports....61
24-6 Health Records....61
24-7 Program of Activities....61
24-8 Buildings and Grounds....62
24-9 Nutrition....63
24-10 Abuse and Neglect Reports....63

XXV. HEARINGS, EMERGENCY SUSPENSIONS, LEGAL ACTIONS AND PENALTIES 64
25-1 Emergency Suspensions of License....64
25-2 Denial, Revocation, or Suspension of License....64
25-3 Notification....64
25-4 District Level Hearing....65
25-5 State Level Hearing....65
25-6 Appeal....65
25-7 Injunction....66
25-8 Criminal Penalties....66
25-9 Violations, Penalties, and Fines....66

XXVI. RELEASE OF INFORMATION....68

APPENDICES

Appendix A .....Child Abuse and Neglect Reporting Statutes
Appendix B .....Reportable Diseases
Appendix C .....Nutritional Standards
Appendix D ..... Playground Safety Standards
Appendix E .....Dishwashing Procedure
Appendix F..... Handwashing Procedure
Appendix G.....Diaper Changing Procedure
Appendix H..... Cleaning and Disinfection Procedure
Appendix I .....Communicable Diseases/Conditions and Return to Child Care Guidelines

Adopted BOH: 01-08-97
Amended BOH: 01-21-98
Amended BOH: 10-14-98
Amended BOH: 07-11-01
Amended BOH: 10-10-01
Amended BOH: 04-09-03
Amended BOH: 07-14-04
Amended BOH: 10-12-05

REGULATIONS GOVERNING LICENSURE OF CHILD CARE FACILITIES

I. GENERAL

1-1 Purpose

A. The purpose of these regulations is to protect and promote the health and safety of children in this state by providing for the licensing of child care facilities as defined herein so as to assure that certain minimum standards are maintained in such facilities. This policy is predicated upon the fact that a child is not capable of protecting himself, and when his parents for any reason have relinquished his care to others, there arises the probability of exposure of that child to certain risks to his health and safety which require the offsetting statutory protection of licensing. This document and its appendices constitute the "Regulations Governing the Licensure of Child Care Facilities."

B. A child care facility may exceed the minimum quality standards required in these regulations, but may not operate without meeting the minimum standards set forth in these regulations.

C. The maximum capacity of a child care facility is determined by the indoor square footage, kitchen square footage, outdoor playground area, and the number of toilets, urinals, and hand washing lavatories, with the lowest capacity determination being controlling.

D. A child care facility may be remeasured and reinspected anytime at the discretion of the licensing agency.

1-2 Legal Authority

The "Mississippi Child Care Licensing Law," Section 43-20-1 et. seq. of the Mississippi Code of 1972 provides the legal authority under which the Mississippi State Department of Health prescribes minimum regulations for child care facilities defined under the law.

1-3 Severability

If any provision of these regulations or the application thereof to any persons or circumstances shall be held invalid, such invalidity shall not affect the provisions or application of these regulations which can be given effect without the invalid

provision or application, and to this end the provisions of these regulations are declared to be severable.

1-4 Definitions

A. Act: The "Mississippi Child Care Licensing Law," Section 43-20-1 et. seq. of the Mississippi Code of 1972.

B. Agency Representative: An authorized representative of the Mississippi State Department of Health.

C. Caregiver: A person who provides direct care, supervision, and guidance to children in a child care facility, regardless of title or occupation.

D. Child Care Facility (Facility): A place which provides shelter and personal care for six (6) or more children who are not related within the third degree computed according to the civil law to the operator and who are under thirteen (13) years of age, for any part of the twenty-four (24) hour day, whether such place be organized or operated for profit or not. The term "child care facility" includes day nurseries, day care centers, child care centers, preschool programs, and any other facility that fall within the scope of the definition set forth above.

Exemptions

1. Child care facilities which operate for no more than two (2) days a week, whose primary purpose is to provide respite for the caregiver or temporary care during other scheduled or related activities; and

2. Organized programs which operate for three (3) or fewer weeks per year such as, but not limited to, vacation bible schools and scout day camps; and

3. Any child residential home as defined in, and in compliance with the provisions of Section 43-16-3(b) et seq., Mississippi Code of 1972;

4. Any program in an elementary, including kindergarten, and/or secondary school system, accredited by the Mississippi State Department of Education, the Southern Association of Colleges and Schools, the Mississippi Private School Education Association, the American Association of Christian Schools, or the Association of Christian Schools International.

   Accreditation, for the purpose of exemption from the provisions of this section, means receipt by any school or school system of full accreditation from an accrediting entity listed in this subsection or proof of application by the school or school system for accreditation status from the accrediting entity. Proof of application for accreditation status shall include, but not be limited to, a copy of the applicant's completed application for accreditation filed with the licensing agency and a letter or other authenticating documentation from a signatory authority with the accrediting entity that the application for accreditation has been received and that the applicant is currently under consideration or review for full accreditation status by the accrediting entity. An exemption for a nonaccredited applicant

under this item shall be for a maximum of one (1) year from the receipt date by the licensing agency of the completed documentation for proof of application for accreditation status. Failure to receive full accreditation by the end of the one-year exemption period for a nonaccredited applicant shall result in the nonaccredited applicant no longer remaining exempt from the provisions of this chapter at the end of the one-year period. However, if full accreditation is not received by the end of the one-year exemption period, the State Board of Health, in its discretion, may extend the exemption period for any nonaccredited applicant for periods of six (6) months, with the total extension not to exceed one (1) year. During any such extension periods, the board shall have the authority to enforce child care facility licensure provisions relating to the health and safety of the children in the school or school system. If a nonaccredited applicant fails to receive full accreditation by the end of all extended exemption periods, the applicant shall no longer remain exempt from the provisions of this chapter at the end of the extended exemption periods.

5. Any Head Start program operating in conjunction with an elementary school system, whether it be public, private or parochial, whose primary purpose is a structured school or school readiness program;

6. Any family child care home as defined in Mississippi Code Section 43-20-53(a) et seq. To wit: An occupied residence in which shelter and personal care is regularly provided for five (5) or fewer children who are not related within the third degree computed according to the civil law to the provider and who are under the age of thirteen (13) years of age and are provided care for any part of the twenty-four (24) hour day. These homes may be voluntarily registered with the Mississippi State Department of Health; and

7. Any membership organization affiliated with a national organization which charges only a nominal annual membership fee, does not receive monthly, weekly, or daily payments for services, and is certified by its national association as being in compliance with the association's minimum standards and procedures, including, but not limited to, the Boys and Girls Club of America, and the YMCA.

   For the purposes of this subsection (6) a nominal fee is defined as $50 or less per year.

All other preschool child care programs and/or extended day school programs shall meet requirements set forth in these regulations.

E. Children with Special Needs: A child needing adaptation in a particular child care facility to access programming and the physical environment

F. Director: Any individual, designated by the operator, who has met minimum state requirements and who has on-site responsibility for the operation of a child care facility. This person may or may not be the operator.

G. Director Designee: Any individual designated to act as the director, having all responsibility and authority of a director, during the director's short-term absence. A director designee shall, at a minimum, be at least 21 years of age, have a high school diploma or GED, and 4 years paid experience in a licensed child care facility. Director Designees shall not retain sole director authority in a facility for more than twenty four (24) total hours per calendar week.

Exception

A facility may have a Director Designee serve for a maximum of fourteen (14) consecutive calendar days during a licensure year. This exception may be used once during the licensure year for the purpose of allowing the director personal leave, i.e., vacation, jury duty, etc.

H. Group: The children assigned to a caregiver or team of caregivers, occupying an individual classroom or well defined physical space within a larger room.

I. Hazardous Condition: A situation or place that presents a possible source of injury or danger.

J. Health: The condition of being sound in mind and body and encompassing an individual's physical, mental and emotional welfare.

K. Infant: Any child under the age of 12 months.

L. Licensing Agency: The Mississippi State Department of Health.

M. Operator: Any person, acting individually or jointly with another person or persons, who shall establish, own, operate, conduct or maintain a child care facility. The child care facility license shall be issued in the name of the operator, or if there is more than one (1) operator, in the name of one (1) of the operators. In the event that there is more than one (1) operator, all statutory and regulatory provisions concerning the background checks of operators shall be equally applied to all operators of a facility, including, but not limited to, a spouse who jointly owns, operates or maintains the child care facility regardless of which operator is named on the license.

N. Parent: As used in these regulations, parent shall mean custodial parent, legal guardian, foster parent, guardian ad litem, and other individuals or institutions to whom a court of competent jurisdiction has granted legal authority over the child.

O. Person: Any person, firm, partnership, corporation or association.

P. Personal Care: Assistance rendered by personnel of the child care facility in performing one or more of the activities of daily living, which includes but is not limited to the feeding, personal grooming, supervising and dressing of children placed in the child care facility.

Q. Physical Confines: The space inside the walls of the child care facility.

R. Safety: The condition of being protected from hurt, injury or loss.

S. School Age Child: A child five (5) years of age or older and eligible to be enrolled in an accredited school program.

T. Service Staff: A person who provides support services such as cooking, cleaning, or driving a vehicle, but is not a caregiver.

U. Toddler: Any child the age of 12 months and under the age of 24 months.

V. Usable Space: In measuring facilities for square footage per child, usable space shall mean space measured on the inside, wall-to-wall dimensions. These spaces are exclusive of food preparation areas, kitchens, bathrooms, toilets, areas for the care of ill children, offices, staff rooms, corridors, hallways, stairways, closets, lockers, laundries, furnace rooms, fixed or permanent cabinets, fixed or permanent storage shelving spaces, and areas not inhabited and used by children. Usable space shall be areas dedicated to children's activities (play, learning, rest, and eating) and shall be utilized for those purposes on a daily basis. Furnishings shall be equipment which is both size and age appropriate for children receiving care. The space occupied by inappropriate or adult size equipment shall be deducted from the children's usable space.

W. Volunteer: Any person who is not an employee who is at the facility or assists with children.

Individuals who volunteer for 120 or more hours in a given licensure year shall meet the requirements of (1) criminal record and child abuse central registry checks to include being fingerprinted, and (2) valid Immunization Compliance Form #121. The facility shall document the time that a volunteer is at the facility.

Further, any individual who has not been fingerprinted and has not had a child abuse central registry check completed shall never be left alone with children.

II. LICENSURE

2-1 Requirement for Licensure

No person shall establish, own, operate, conduct or maintain a child care facility in this state without a license issued pursuant to these regulations.

The licensing authority will require no entity exempt from the licensure requirement to apply for a license. However, should an exempt entity desire to obtain a license, it will be subject to these regulations.

2-2 Types of Licenses

A. Temporary License: The licensing agency may issue a temporary license to any child care facility. This license will allow the child care facility to operate pending the issuance of a regular license. The temporary license will reflect the date of issuance of the license, the expiration date, and the number of children for which the facility is licensed. The license issue date is the

actual date documentation is received and approval for initial temporary license is granted; the expiration date is the last day of the sixth month following the issue date; examples: January 01 through June 30 or January 15 through June 30.

During the temporary licensure period, an operator must complete the following before the temporary license can be upgraded to a regular license:

1. Mandatory training required of all directors, director designees, and operators.

2. The following documents must be submitted to and approved by the facility licensing official:

   a. Facility daily schedule

   b. Discipline and guidance policy

   c. Transportation policy

   d. Safety policy

   e. Arrival and departure procedures

   f. Notarized statement of verification of required background checks, immunization compliance (for all staff and children), and appropriate number of staff certified in CPR and First Aid.

   g. Approved menu plan.

3. A plan of activities appropriate for each age group served shall be maintained at the child care facility and made available to the licensing official upon request.

B. Regular License: The licensing agency may issue a regular license when all conditions and requirements for licensure have met compliance. The duration of a regular license shall not exceed one (1) year.

C. Probational License: The licensing agency may issue a probational license, at its discretion, where violations may endanger the health or safety of the children but only when such violations may be corrected within a specified time frame. There shall be a written corrective action plan agreed upon between the operator and the licensing agency. The period of time for which a probational license is issued shall be at the discretion of the licensing agency but in no instance shall exceed six (6) months.

D. Restricted License: The licensing agency may issue any type of license with conditions/restrictions when, at its discretion, the health or safety of the children require such a conditional/restrictive statement on the license. Such conditions/restrictions shall include but not be limited to: certain individuals to be barred from the premises or any other situations that may endanger children and that should be so recorded on the license. Any violation of any

such condition/restriction shall result in immediate emergency suspension of the license. When such conditions/restrictions no longer pose a threat to the children, the conditional/restrictive statement may be removed.

2-3 Application for License

An application for a license under these regulations shall be made to the licensing agency upon forms provided by it and shall contain such information as the licensing agency may reasonably require.

2-4 License Fee

All application fees, licensure fees, renewal fees, and administrative charges shall be paid by certified check or money order payable to the **Mississippi State Department of Health**, and are nonrefundable. Checks returned for insufficient funds, closed account, etc., shall be assessed an additional $50 fee.

A. Application Fee ..... $ 50.00

B. Initial Licensure Fee

1. Maximum capacity 12 or fewer ..... $ 50.00
2. Maximum capacity 13 to 30 ..... $100.00
3. Maximum capacity 31 to 50 ..... $130.00
4. Maximum capacity 51 to 75 ..... $185.00
5. Maximum capacity 76 or more $200.00

C. Renewal Fee

1. Maximum capacity 12 or fewer ..... $ 50.00
2. Maximum capacity 13 to 30 ..... $100.00
3. Maximum capacity 31 to 50 ..... $130.00
4. Maximum capacity 51 to 75 ..... $185.00
5. Maximum capacity 76 or more $200.00

D. Reinstatement Fee $200.00

E. Returned Check Fee ..... $ 50.00

F. Late Fee ..... $ 25.00

G. Fingerprinting Fee (Per Fingerprint Card) ..... $ 50.00

NOTE: Except for the fingerprinting fee, no governmental entity or agency that operates a child care facility shall be required to pay the fees set forth in this section. Third party providers that contract with a state agency for the provision of child care services are subject to all fees, fines, etc. Further, should an entity exempt from licensure apply for a license it shall be subject to all fees listed in this section.

2-5 Certificate of Inspection by Fire Department

A certificate of inspection and approval by the fire department of the municipality or other political subdivision in which the child care facility is located shall be submitted to the licensing agency with the application and license fees. Except that if no fire department exists where the facility is located, the State Fire Marshall shall certify as to the inspection for safety from fire hazards.

The inspection form to be used for fire inspections shall be MSDH Form #333 and shall be signed by a signatory authority of the fire inspection authority making the inspection.

2-6 Inspection

An agency representative(s) shall inspect each child care facility prior to issuing or renewing a license to assure compliance with these regulations.

2-7 Record of Inspection

Whenever an inspection is made of a child care facility, the findings shall be recorded on an official inspection form and furnished to the operator, director, and/or their representative, at the time the inspection is made.

2-8 Renewal of License

A. The licensing agency shall issue licenses which may be renewed annually. The licensing agency shall mail a renewal notice, at least seventy-five (75) days prior to the expiration date of the license, to the address of the operator registered with the licensing agency. The operator shall:

1. Complete the renewal form;

2. Submit any and all certificates of inspection and approval required by the licensing agency;

3. Enclose the renewal fee; and

4. File the above with the licensing agency at least thirty (30) days prior to the expiration date on the license.

NOTE: Renewal applications postmarked less than thirty (30) days prior to the expiration date of the license shall be assessed a $25.00 late fee.

B. An operator who does not file the renewal application prior to the date that the license expires will be deemed to have allowed the license to lapse. Said

license may be reinstated by the licensing agency, in its discretion, by payment of both the renewal fee and the reinstatement fee, provided said application for reinstatement is made within one (1) month of the expiration date of the license. After the one month reinstatement period, it shall be required that an application for an initial license be submitted. All licensure requirements in effect at the time the new initial application is filed shall be met.

2-9 License Not Transferable or Assignable

Each license shall be issued only for the premises and operator named in the application and shall not be transferable or assignable. A change of ownership includes, but is not limited to, inter vivos gifts, purchases, transfers, lease arrangements, cash and/or stock transactions or other comparable arrangements whenever any person or entity acquires or controls a majority interest of the child care facility or service. Changes of ownership from partnerships, single proprietorships or corporations to another form of ownership are specifically included.

2-10 Display of Licenses

The current license issued by the licensing agency to the named child care facility and operator shall be posted and displayed in a conspicuous place and in easy view of all persons who enter the child care facility. The facility operator shall also post next to the license, in plain view, a notice provided by the MSDH, that informs the public of where and how they may report a complaint against the facility.

III. RIGHT OF ENTRY AND VIOLATIONS

3-1 Right of Entry

An agency representative may enter any child care facility for the purpose of making inspections or investigations to determine compliance with these regulations.

3-2 Violations

If violations noted on the inspection form are not corrected within the period of time specified by the licensing agency, a license may be denied, suspended, or revoked in accordance with these regulations.

IV. FACILITY POLICY AND PROCEDURES

4-1 Parental Information

Before a child's enrollment, the parent shall be provided with the following:

A. Operating information:

1. The child care facility's purpose, scope of service provided, philosophy, and any religious affiliation;

2. Name(s), business telephone number, business address, and home telephone number of the operator, director or an individual in authority who can be reached after the facility's normal hours of operation;

3. The phone number of the child care facility;

4. Organization chart or other description of established lines of authority of persons responsible for the child care facility's management within the organization;

5. The program and services provided and the ages of children accepted;

6. The hours and days of operation and holidays or other times closed;

7. The procedures for admission and registration of children;

8. Tuition, plans for payment, and policies regarding delinquent payments;

9. Types of insurance coverage for children, or a statement that accident insurance is not provided or available;

10. If a facility does not provide liability insurance there shall be a statement in the child's record, signed by the parent indicating that the parent is aware that the facility does not carry liability insurance.

11. Reasons/circumstances and procedures for removal of children from rolls when parents are requested by facility staff to remove a child;

12. Procedures to include the amount of notice a parent is required to give the facility before removing a child; and

13. Policy governing the maximum hours per day or week that a child can be left at the child care facility.

B. Arrival and departure procedures for children:

1. Procedure, approved by the licensing authority, for assuring a child's safe arrival and departure (All children shall be signed in and out of the facility by an authorized individual.);

2. Procedures for protecting children from traffic and other hazards during arrival and departure and when crossing streets;

3. Policy for release of children from the child care facility only to responsible persons for whom the child care facility has written authorization; and

4. Policy governing a parent picking up a child after closing hours and procedures if a child is not picked up.

C. Program and activities information:

1. Policies and procedures about accepting and storing a child's personal belongings;

2. Discipline policies including acceptable and unacceptable discipline measures;

3. Transportation and safety policies and procedures;

4. Policies prohibiting the photographing of a child without parental consent;

5. Policies regarding a child's participation in extracurricular activities not sponsored by the child care facility, including but not limited to baseball, softball, soccer, ballet, or gymnastics; and

6. Policies regarding water activities and safety procedures. These policies shall include those water activities which take place away from the child care facility property, e.g., taking children to a public swimming pool.

7. Policies encouraging sun safety practices and activities.

D. Health and emergency procedures:

1. Procedures for storing and giving a child medications;

2. Policy for reporting suspected child abuse;

3. Provision for emergency medical care, treatment of illnesses and accidents, which include:

a. A plan to handle a child in a medical crisis;

b. A plan to obtain prompt services of physician and hospitalization, if needed;

c. A plan for immediately notifying the parent of any illness, accident or injury to the child;

d. A plan to acquire the services of a certified practitioner for a child exempt from medical care on religious grounds.

4. Evacuation plan including procedures for notifying the parents of the relocation site.

5. Policy and procedures for handling dangerous situations, including but not limited to, dealing with violent individuals, individuals

entering facility with weapons, bomb threats, or conditions posing an immediate threat to children.

E. State regulations:

1. A summary of the licensing regulations and any appendices thereto, provided by the licensing agency;

2. Each child's record shall contain a statement signed by the child's parent, indicating that they have received a summary of licensing standards and other materials designated by the licensing agency for such distribution;

3. The name and telephone number of the MSDH licensing official responsible for the inspection of the facility;

4. The toll free 1-866-489-8734 Child Care Facility Complaint Hot Line telephone number.

4-2 Smoking, Tobacco Products, and Prohibited Substances

A. Smoking, the use of tobacco products in any form, alcohol, or illegal drugs, are prohibited within the physical confines of a child care facility, and on all outdoor playground areas.

B. If smoking or use of tobacco products is permitted outside the physical confines of a child care facility and away from the outdoor playground areas, it shall be limited to a designated area out of the presence of children. The designated area shall be a place where children, in the course of normal daily activities, may not observe staff and volunteers smoking or using tobacco products.

C. Designated smoking areas shall be clearly identified and posted and shall be provided with receptacles for tobacco product waste.

4-3 Parental Access

Child care facilities shall assure the parent that they have welcome access to the child care facility at all times. Welcome access shall be defined as a parent having access to areas of the facility available to his child and nondisruptive to normal daily activities.

4-4 Changes in Facility Operations

The operator shall immediately notify the licensing agency of any major changes affecting areas of the child care facility's operations. Such major changes include, but are not limited to, operator, director, location, physical plant, or number of children served.

4-5 Notice of Legal Action

The licensing agency shall be notified within seven (7) days, in writing, if notice is received of legal action against the child care facility.

4-6 Posting of Information

The following items shall be posted conspicuously in the child care facility at all times:

A. Accessible to employees and parents:

1. License

2. Daily activity schedule

3. Inspection form, if applicable, or Menus and Food Service Permit, if applicable.

4. Evacuation route

5. The facility operator shall also post next to the license, in plain view, a notice provided by the MSDH, that informs the public of where and how they may report a complaint against the facility.

B. In kitchens:

1. Menus

2. Evacuation route

3. Food Service Permit/Inspection Form

C. The evacuation route in all rooms utilized by children.

4-7 Weapons Prohibited

A. There shall be no firearms or other dangerous weapons allowed in a child care facility.

B. If a facility is located in an occupied dwelling, all firearms shall be equipped with trigger locks and kept in a locked room out of the sight of all children. All other dangerous weapons shall be kept under lock in a room not accessible to children.

C. Other dangerous weapons include, but are not limited to, hunting knives, spears, machetes, archery equipment, etc.

V. PERSONNEL REQUIREMENTS

5-1 General Requirements For Personnel

A. Each employee or potential employee of a child care facility, whether full time, part time, temporary, substitute, or volunteer, shall be of good moral

character and shall meet the minimum qualifications for the respective job classification, as set forth in these regulations.

B. Any individual who, in the opinion of the licensing authority, appears to be unable to physically or mentally care for children on a daily basis and/or in emergency situations will not be allowed to act as a caregiver or caregiver assistant. Any person whose ability is in question shall, at the request of the licensing authority, be able to demonstrate the ability to perform, at a minimum but not limited to the following:

1. Physical ability to exit the children during a fire drill in under two (2) minutes;

2. Ability to read medication directions and properly dispense medication to children (required only if the facility dispenses medication);

5-2 Criminal Record (Fingerprinting), Child Abuse Central Registry Checks, and Sex Offender Records Checks

All operators, employees, and prospective employees of a child care facility and any person residing in a residence licensed as a child care facility shall have a criminal records background (fingerprint), child abuse central registry checks, sex offender record checks.

An individual shall be allowed to begin employment in a child care facility prior to the completion of child abuse central registry check and the criminal records (fingerprint) check and sex offender registry check. However, no individual may be allowed to provide unsupervised care to children until all three items have been verified by the licensing authority.

Any individual who volunteers in a child care facility for 120 or more hours per licensure year shall be required to have (1) criminal record, child abuse central registry checks, and sex offender registry check to include being fingerprinted, and (2) valid Immunization Compliance Form #121.

Individuals under the age of 18 are not required to be fingerprinted. However, they may never be left alone with children.

Once the fingerprint check, child abuse central registry check, and sex offender registry check have been completed and verified by the licensing authority as having no disqualifying conditions, a letter shall be issued to the person fingerprinted stating that they are eligible to be employed in a child care facility. The employer shall also receive a copy of the notification letter. This letter shall be valid for a period of five (5) years from the date on the letter unless otherwise voided. All individuals will be required to be finger printed every five (5) years.

If an individual is determined to be unsuitable for employment in a child care facility, they will receive a letter stating such with instructions regarding the appeal process. The employer shall also receive a copy of the non-suitability letter. Whether or not an individual remains employed at the child care

facility during the appeal process is at the discretion of the operator of the facility.

Should it be determined by the licensing authority that acceptable fingerprints cannot be obtained from an individual, an alternative method of obtaining a criminal records check may be used. In such case the affected individual will be notified in writing of the process they are to follow. Failure to follow the procedure shall result in the individual being determined to be unsuitable to work in a child care facility.

5-3 Child Care Director Qualifications

A child care director shall be least 21 years of age and shall have at a minimum:

A. A bachelors degree in early childhood education, child development, elementary education, child care, special education, psychology (with emphasis on child psychology), or family and consumer sciences (with emphasis on child development), or equivalent degree from another child-related field or course of study;

OR

B. A two-year associate degree from an accredited community or junior college in child development technology which must include a minimum of 480 hours of practical training, supervised by college instructors, in a college operated child care learning laboratory.

OR

C. A two-year associate degree from an accredited community or junior college in child development technology or child care and two (2) years paid experience in a licensed child care facility.

OR

D. Two years paid experience as a caregiver in a licensed child care facility, and either (1) a current Child Development Associate (CDA) credential from the Council for Early Childhood Professional Recognition (CECPR), or (2) a Mississippi Department of Human Services (MDHS) Office for Children and Youth (OCY) Director's Child Care Credential, or (3) 24 semester hours credit with a grade of "C" or better from an accredited college or university in courses specific to early childhood;

OR

E. A verified certificate from the licensing agency certifying that the individual was qualified to be the director of a licensed child care facility prior to January 1, 2000 in the State of Mississippi.

5-4 Caregivers

Caregivers shall be at least 18 years of age, and shall have at a minimum:

A. A high school diploma or equivalent (GED);

OR

B. A current CECPR Child Development Associate (CDA) credential, or an MDHS OCY Director's Child Care Credential,

OR

C. Three (3) years prior documented experience caring for children who are under 13 years of age and who are not related to the caregiver within the third degree computed according to civil law.

Staff failing to meet the requirements of education and/or experience to act as a caregiver shall be designated as caregiver assistants.

5-5 Caregiver Assistants

Caregiver assistants shall be at least 16 years of age. Caregiver assistants shall work under the direct on-site supervision of a director or caregiver at all times. They shall not have the direct responsibility for a group of children as the sole caregiver. Caregiver assistants under the age of 18 shall not be given the authority to discipline children.

5-6 Students

Students in a field study placement, a practicum, or vocational child care training program may assist in the care of the children when the following conditions have been met.

Students who are 18 years of age or older and who are in a child care facility for 120 or more hours per licensure year shall have a record on file in the facility which shall contain the following:

1. Name, date of birth, address, and telephone number;

2. Name and telephone number of a contact person from the school or university placing the student;

3. Date placement began and daily record of hours student is present;

4. Mississippi State Department of Health Certificate of Immunization Compliance Form 121;

5. Documentation that the criminal records check (fingerprinting), and child abuse central registry check have been completed and no records found and,

6. Documentation of a minimum of one hour of orientation, within one (1) week of placement, including but not limited to, the child abuse law and reporting procedures, emergency procedures, and facility discipline and transportation policies.

Students who are under 18 years of age and who are in a child care facility for 120 or more hours per licensure year shall have a record on file in the facility which shall contain all of the above listed material with the exception of Item 5. The facility shall document the time that a student is at the facility.

No student shall be left alone with children unless an approved criminal records check is on file.

5.7 Use of Director Designee

A. A director designee is an individual designated to act as the director, having all responsibility and authority of a director, during the director's short-term absence.

B. A director designee shall, at a minimum have a high school diploma or GED and four (4) years paid experience in a licensed child care facility or licensed/accredited kindergarten program. A director designee shall not retain sole director authority in a facility for more than twenty four (24) total hours per calendar week.

Exception

A Facility may have a Director Designee serve for a maximum of fourteen (14) consecutive days during a licensure year. This exception may be used once during the licensure year for the purpose of allowing the director personal leave, i.e., vacation, jury duty, etc.

C. When the director designee is in charge of the facility, they shall have full access to all documents of the facility that are necessary for the licensing agency to conduct an inspection or complaint investigation. These documents shall include, but are not limited to, staff records, children's records, safety inspections, and any other material or documents required by the inspecting official.

5.8 Staff Development

A. Owners, Directors and Director Designees. Either before a license to operate is issued or within the first six months after the issuance of a new license, owners, directors and director designees of the child care facility shall each complete mandatory training on courses covering *Childcare Regulations, New Director Orientation* and *Playground Safety*. If a new director or director designee is appointed by the child care facility after the license issuance, the mandatory training courses shall be completed by such individual(s) within the first six months of appointment. In the sole discretion of the licensing agency, mandatory training may be waived upon the submission of documentation of the individual's prior completion of relevant training.

B. All child care staff, directors, director designees and caregivers shall be required to complete 15 contact hours of staff development, accrued during the licensure year, annually. The National Association for the

Education of Young Children (NAEYC), a leading organization in child care and early childhood education recommends annual training based on the needs of the program and the preservice qualification of the staff. Training should address the following:

a) Health and safety;
b) Child growth and development;
c) Nutrition;
d) Planning learning activities;
e) Guidance and discipline techniques;
f) Linkages with community services;
g) Communications and relations with families;
h) Detection of child abuse;
i) Advocacy for early childhood programs;
j) Professional issues.

C. Contact hours for staff development shall be approved by the licensing agency.

D. No more than five (5) contact hours of approved in-service training provided by the child care facility may be counted toward the total number of hours required each year. More than five (5) hours of in-service training may be provided by the child care facility but no more than five (5) hours may be counted toward the required total of 15 hours.

E. All volunteers shall receive, at a minimum, one (1) hour of orientation by the facility director. Such orientation shall, at a minimum, include a review of the child abuse law and reporting requirements, emergency exit procedures, and the facility transportation policy.

F. Before a temporary license may be upgraded to a regular, license the facility owner/operator and director shall complete a minimum of four (4) hours of staff development training on the *Regulations Governing Licensure of Child Care Facilities*, three (3) hours of New Director Orientation, and three (3) hours training in playground safety as provided by the MSDH.

5-9 Review by Licensing Agency

A. The satisfaction of the personnel requirements applicable to any individual shall be determined by the licensing agency acting pursuant to its authority under applicable statutes and regulations.

B. The licensing agency, in its sole discretion, may accept suitable educational credits, programs or degrees in lieu of those specified in Section V upon the submission of adequate documentation by the individual.

VI. RECORDS

6-1 Records

Records listed in this section shall be kept within the physical confines of the child care facility and shall be made available to the licensing agency on request.

6-2 Records Retention

A. All records, unless otherwise specified, shall be kept for a period of at least three (3) years.

B. A child's records shall be retained for a period of one (1) year after the child is no longer in attendance at the facility.

6-3 Facility Records

A. Attendance records for children and employees;

B. A current alphabetical roster of children enrolled in the child care facility, to include the child's full name and date of birth;

C. A current alphabetical roster of staff employed or volunteers in the child care facility;

D. Current license;

E. Records of monthly fire/disaster evacuation drills; and,

F. A record shall be maintained of any medication administered by the director or caregiver showing date, time and signature of dispensing employee. A medication record may be destroyed 90 days after administering the medication.

G. A record shall be maintained on each volunteer to document date and number of hours of volunteer service.

H. Each facility shall maintain a notebook containing copies of the MSDH Certificate of Immunization Compliance (MSDH Form #121) for both staff and children at the facility. The notebook shall contain separate current alphabetical rosters of both staff and children. The certificates shall be filed in alphabetical order to match the current staff and child rosters.

I. Each facility shall maintain a notebook containing copies of the *Child Abuse Central Registry Check* and the *Letter of Suitability for Employment* from the licensing agency on all employees and, when applicable, volunteers. The notebook shall contain an alphabetical roster of staff and volunteers. Along with name, date-of-birth, the initial date of hire or volunteering must be given for cross-reference to individual personnel/volunteer files. *Child Abuse Central Registry Checks* and *Letter of Suitability for Employment* shall be filed in order matching the alphabetical roster.

J. Items required by sections H and I above may be placed within the same notebook.

6-4 Personnel Records

A. Employee Records

Each employee's personnel record shall contain the following:

1. Name, date of birth, address, and telephone number;

2. Documentation of education, training, and experience necessary for employment;

3. Records of staff development accrued during each licensure year, beginning with date employed;

4. Date of employment and date of separation;

5. Mississippi State Department of Health Certificate of Immunization Compliance Form 121;

6. Documentation that the criminal record checks (fingerprinting), Child Abuse Central Registry checks, and Sex Offender Registry checks, have been conducted; and the information shall be included in each employee's personnel file; and

NOTE: Each person living in a private residence used as a child care facility shall meet the same requirements as employed personnel, relative to health, criminal record, fingerprinting, child abuse central registry checks, and sex offender registry checks.

7. Documentation of orientation, within one (1) week of being hired, including but not limited to emergency procedures (to include policies for handling dangerous situations), staffing and supervision requirements, daily schedules, physical/emotional/developmental problems of children, discipline policies, and child abuse and neglect; and

8. Upon resignation or termination, personnel records shall be kept on file and be made available to the licensing agency for at least one (1) year after the last day of employment.

B. Volunteer Records (120 or more hours per year)

For any person who volunteers in a child care facility for 120 or more hours per licensure year, a record shall be kept which contains the following:

1. Name, date of birth, address, and telephone number;

2. Documentation of education, training, and experience that may help them in their role as a volunteer;

3. Date individual began volunteering and last date individual volunteered at facility;

4. Mississippi State Department of Health Certificate of Immunization Compliance Form 121;

5. Documentation that the criminal records check (fingerprinting), child abuse central registry check, and sex offender registry check have been conducted, and the information included in each volunteer's file; and

6. Documentation of a minimum of one hour of volunteer orientation, within one (1) week of volunteering, including but not limited, to the child abuse law and reporting requirements, emergency exit procedures, policies for handling dangerous situations, and the facility transportation policy;

7. A volunteer's record shall be retained for a period of one (1) year after they are no longer volunteering at the facility; and

8. A record shall be maintained on each volunteer to document date and number of hours of volunteer service.

C. Volunteer Records (Less than 120 hours per year)

For any person who volunteers in a child care facility for less than 120 hours per licensure year, a record shall be kept which contains the following:

1. Documentation of a minimum of one (1) hour of volunteer orientation within one (1) week of volunteering, including but not limited, to the child abuse law and reporting requirements, emergency exit procedures, policies for handling dangerous situations, and the facility transportation policy and special needs of children;

2. A volunteer's record shall be retained for a period of one (1) year after they are no longer volunteering at the facility; and

3. A record shall be maintained on each volunteer to document date and number of hours of volunteer service.

6-5 Child Records

The facility shall maintain an individual file for each child under its current care, and for any withdrawn child who withdrew during the preceding twelve months, containing the following identification and contact information, parental instructions, authorizations and other documents required by its policy manual:

A. Identification and Contact Information

1. The name of the child and names of parents/guardians
2. Home address and home telephone number
3. The parent's business name, address and telephone number

4. The child's date of birth
5. Date of acceptance at facility and date of withdrawal, if any, with the parent's stated reason for withdrawal
6. Other contact information required to be maintained in accordance with facility's policy manual.

B. Parental Instructions

1. If the parent provides written instructions to the facility, those instructions concerning the child's growth and development, medical needs, allergies, toilet training and other information relevant to the child's well-being shall be maintained and updated as provided from time to time.
2. Written identification of an authorized, responsible person(s) for pick up of the child.
3. Documentation of any limitation of parental rights of the other parent or stepparent.
4. Documentation of any limitation or restriction, if any, on activities of child, or other participation by the child in certain events such as holiday celebrations or being photographed or other parental concerns.

C. Authorizations

1. Signed written authorization to obtain emergency medical treatment and to administer medication.
2. Election by parent either (a) to provide written authorization consenting to any and all field trips, excursions, or series of events outside the child care facility, or (b) to provide written consent only for those specific field trips, excursions, or series of events for which a date, time and location are specifically approved.
3. Signed acknowledgment by parent that the written policies and procedures described in Section 4-1 has been received by the parent.
4. Signed acknowledgment by parent that a summary of licensing standards and other materials designated by the licensing agency has been received by the parent.

D. Documents Required by Policy Manual or Contract

1. If agreed by the facility in its policy manual or caregiver contracts, method in which facility will inform the parent or contact person if a child does not arrive at the facility within a reasonable time after a scheduled drop-off.
2. Any other documents or identification records agreed to be maintained by the facility.

6-6 Confidentiality of Records and Information

A. Individual child records are confidential and shall not be disclosed or released without prior written authorization by the parent.

B. Individual personnel records are confidential and shall not be disclosed or released without prior written authorization by the employee.

VII. REPORTS

7-1 Serious Occurrences Involving Children

The child care facility shall enter into the child's record and orally report immediately to the child's parent and the licensing agency any serious occurrences involving children. If the child care facility is unable to contact the parent and the licensing agency immediately, it shall document this fact, in writing, in the child's record. Oral reports shall be confirmed in writing and mailed within two (2) days of the occurrence. Serious occurrences include accidents or injuries requiring extensive medical care or hospitalization; death; arrest; alleged abuse or neglect; fire or other emergency situations.

7-2 Child Abuse

Any operator or employee of a child care facility who has suspicion or evidence of child abuse or neglect shall report it immediately to the Mississippi Department of Human Services in accordance with the state's Youth Court Act. (Appendix "A")

7-3 Communicable Disease

The child care facility shall promptly report any known or suspected case or carrier of any reportable disease to the Mississippi State Department of Health, as published in the "List of Reportable Diseases." (Appendix "B")

7-4 Infants and Toddlers

For infants and toddlers, the child care facility shall provide, to the child's parent, daily written reports which include liquid intake, child's disposition, bowel movements, and eating and sleep patterns.

VIII. STAFFING

8-1 General

A. The staff-to-child ratio shall be maintained at all times, to include when children are arriving and departing the facility.

B. Children shall not be left unattended at any time. Video monitors cannot be used as a substitute for the physical presence of a caregiver in a room.

C. During all hours of operation, including arrival and departure of children, a child care facility employee shall be present to whom administrative and supervisory responsibilities have been assigned. This child care facility employee shall meet the minimum qualifications of a director or director designee.

NOTE: Operators of child care facilities shall provide to the local licensing official a list of all individuals who meet the qualifications of a director or director designee and may be assigned administrative and supervisory responsibility for the facility when the director is absent. Documentation that an individual meets the qualifications of a director shall be submitted to and approved by the local licensing official. Director designee qualifications shall be maintained on site and available to the licensing official during site visits.

D. During all hours of operation, including the arrival and departure of children, a child care facility employee shall be present who holds a valid CPR certification, at any location where the children are present.

E. During all hours of operation, including the arrival and departure of children, a child care facility employee shall be present who holds a valid first aid certificate issued by an agent recognized by the licensing authority.

8-2 Ratio

A. The minimum ratio of caregiver staff-to-children present at all times shall be as follows:

Age of Children	Number of Children to Caregiver Staff
Less than 1 year	5
1 year	9
2 years	12
3 years	14
4 years	16
5 through 9 years	20

10 through 12 years 25

B. Staff-to-child ratios shall be met at all times, including during opening/closing, field trips and swimming or water activities whether at the child care premises or off-site.

C. In mixed age groups, the age of the youngest child in the group determines the staff-to-child ratio. Preschool children shall not be grouped with school age children in any single area during normal classroom and playground or water activities.

D. With the exception of children under two (2) years of age, children may be under the direct supervision (staff in the same room) of 50 percent of the staff required by this section during rest period times, provided the required staff-to-child ratio is maintained on the premises.

E. At no time will a single individual be responsible for the supervision of children located in more than one classroom at any given time.

F. Compliance with group sizes is not required during normal arrival and departure time periods, or during special events. However, the age-appropriate staff-to-child ratio shall be maintained at all times.

8-3 Grouping

When children are placed in groups, the maximum group size shall be determined by the following chart.

Age of Children in the Group	**MAXIMUM** number of children **ALLOWED** in a group of children this age	**MINIMUM** number of caregivers **REQUIRED** for a group of children this age	**MINIMUM** square footage **REQUIRED** for a group of children this age
Infant (Under 12 months)	10 infants	2 caregivers	40 square feet per child
Toddler (12 months to under 24 months)	10 toddlers	2 caregivers	45 square feet per child
2 years	14 children	2 caregivers	35 square feet per child
3 years	14 children	1 caregiver	35 square feet per child
4 years	20 children	2 caregivers	35 square feet per child
5-9 years	20 children	1 caregiver	35 square feet per child

10-12 years	25 children	1 caregiver	35 square feet per child

NOTE: **Space requirements for groupings in facilities licensed for school age children only are addressed in Sections 22-3 and 23-8.**

IX. PROGRAM OF ACTIVITIES

9-1 General

A. The child care facility shall provide a basic program of activities geared to the age levels and developmental needs of the children served.

B. The child care facility shall provide for the reading of age-appropriate materials to children.

C. The child care facility shall incorporate programs to encourage sun safety practices (skin cancer prevention), into activities for all age levels.

9-2 Daily Routines

All daily routines, such as eating and rest periods, shall be scheduled for the same time each day.

9-3 Eating

Meal periods are breakfast, lunch, dinner, and snacks. A minimum of 30 minutes shall be scheduled for each breakfast, lunch, and dinner meal period. A minimum of 15 minutes shall be scheduled for each snack meal period.

9-4 Rest Periods

A. For children under six (6) years of age, rest periods shall be scheduled for a minimum period of one (1) hour, and shall not exceed two and one-half (2½) hours.

B. Physical force shall not be used in requiring children to lie down or go to sleep during rest periods.

C. Rest periods are not required for children in attendance for less than six (6) hours.

D. Rest periods are not required for school age children.

E. An infant shall not be placed on his stomach for sleeping unless written physician orders are in the child's record.

9-5 Outdoor Activities

A. Each infant shall have a minimum of 30 minutes of outdoor activities per day, weather permitting.

B. Toddler, preschool, and school age children shall have a minimum of two (2) hours of outdoor activities per day, weather permitting. Children who are in attendance at a facility for seven (7) hours per day or less shall have a minimum of 30 minutes of outdoor activity per day, weather permitting.

C. Sun safe practices shall be used during outdoor activities scheduled between 10 A.M. and 2 P.M. during the period April 1st to September 15th.

D. Sun safe practices shall be evident in the planning of all outdoor events.

E. Outdoor activities shall be held in areas providing shade or covered spaces.

9-6 Infant and Toddler Activities

A. Infants and toddlers shall be free to creep, crawl, toddle, and walk as they are physically able.

B. Infants and toddlers shall be taken outdoors every day, weather permitting.

C. For infants who cannot move about the room, caregivers shall frequently change the place and position of the infant and the selection of toys available, and the child shall be held, rocked, and carried about.

D. Television viewing, including video tapes and/or other electronic media, is not allowed for infants or for staff in an infant area.

E. Television viewing, including video tapes and/or other electronic media, for toddlers is limited to one (1) hour per day, must be of educational content and a scheduled part of the approved daily plan of activities posted in the facility.

F. Television viewing by staff is not permitted in areas occupied by children except for the purposes as described in subsection E., above.

X. EQUIPMENT, TOYS, AND MATERIALS

10-1 General

A. Equipment, toys, and materials for both indoor and outdoor use shall be appropriate to the age and developmental needs of the children served.

B. Developmentally age-appropriate toys shall be available and accessible for infants, and shall include but not be limited to the following:

1. Simple, lightweight, open-ended, easily washable toys such as containers, balls, large pop-beads, nesting cups;

2. Rattles, squeak toys, action/reaction toys;

3. Cuddly toys;

4. Toys to mouth such as teethers and rings;

5. Pictures of real objects; and

6. A crawling area with sturdy, stable furniture for pulling up self.

C. Developmentally age-appropriate toys shall be available and accessible for toddlers, and shall include but not be limited to the following:

1. push and pull toys;

2. stacking toys, large wooden spools/beads/cubes;

3. sturdy picture books, music;

4. pounding bench, simple puzzles;

5. play telephone, dolls, toys to appeal to child's imagination;

6. large paper, crayons;
7. sturdy furniture to hold on to while walking; and

8. sand and water toys.

D. Developmentally age-appropriate toys shall be available and accessible for preschoolers, and shall include but not be limited to the following:

1. active play equipment for climbing and balancing;

2. unit blocks and accessories;

3. puzzles, manipulative toys;

4. picture books and records, musical instruments;

5. art materials such as finger and tempera paints, clay, play dough, crayons, collage materials, markers, scissors, and paste;

6. dramatic play materials such as dolls, dress-up clothes and props, child-sized furniture, puppets; and

7. sand and water toys.

E. Children's original work shall be displayed in the child care facility.

F. Books shall be on shelves and tables for children to look at and read. Every child shall have age-appropriate materials (including picture books) read to and discussed with him or her every day. Where appropriate, the materials should cover topics with which the children are involved.

G. Television viewing by preschool children shall be limited to two (2) hours per day and shall be educational programming only. Television viewing by

staff is not permitted in areas occupied by children except for the purposes as described herein.

H. The daily activity schedule shall demonstrate that preschoolers are given opportunities to do a variety of activities, including both quiet and active, such as block play, art activities, puzzles, books, and learning games, and that stories are read to and discussed with each child every day.

10-2 Playground Equipment

A. All playgrounds and playground equipment used by children 2 - 12 years of age shall meet the safety standards set forth in Appendix "D" of these regulations.

B. Playground equipment shall be of safe design and in good repair. Outdoor playground climbing equipment and swings shall be set in concrete footings located at least six (6) inches below ground surface. Indoor playground equipment shall be installed according to the manufacturer's specifications. Swings shall have soft and/or flexible seats. Access to playground equipment shall be limited to age groups for which the equipment is developmentally appropriate.

C. Equipment designed for outdoor use by infants and toddlers shall be accessible to shaded areas to ensure sun safe practices.

10-3 Paint

Paint on toys, equipment, furniture, walls, and other items shall be lead-free and non-poisonous.

10-4 Chairs and Tables

Chairs and tables shall be of a size appropriate to the size and age of the children. There shall be an adequate number of chairs and tables to accommodate the children present at the facility.

10-5 Hooks and Compartments

Individual hooks or compartments shall be provided for each child for hanging or storing outer and/or extra clothing as well as for personal possessions. Hooks shall be spaced well apart so that clothes and belongings do not touch those of another child. Hooks shall also be placed at a height suitable to prevent an injury to a child.

10-6 Sand Boxes

A. Sand boxes shall be constructed to permit drainage, shall be covered tightly and securely when not in use, and shall be kept free from cat or other animal excrement.

B. Sand contained in sand boxes shall not contain toxic or harmful materials.

10-7 Cribs

Cribs shall be made of wood, metal, or approved plastic and have secure latching devices. They shall have slats spaced no more than two and three-eights (2 3/8) inches apart, with a mattress fitted so that no more than two (2) fingers can fit between the mattress and the crib side. Drop-side latches shall securely hold sides in the raised position and shall not be reachable by the child in the crib. Cribs shall not be used with the drop down side down. There shall be no corner post extensions (over 1/16 inch), or cut outs in headboards in the crib. The use of stackable cribs is prohibited.

10-8 High Chairs

High chairs, if used, shall have a wide base and a T-shaped safety strap. They shall be labeled or warranted by the manufacturer in documents provided at the time of purchase or verified thereafter by the manufacturer as meeting the American Society for Testing Materials (ASTM) Standard F-404 (Consumer Safety Specifications for High Chairs).

10-9 Rest Period Equipment

A. Individual beds, cots, mattresses, pads, or other acceptable equipment shall be used for rest periods. These shall be kept in a sanitary condition. Once a sheet or blanket has been used by a child, it shall not be used by another child until it has been laundered.

B. Rest period equipment shall be clean and covered with a waterproof cover.

C. Nap pads/cots are designed for use by one (1) child only at a time.

D. Nap pads utilized by more than one child shall be sanitized after each child's use. Nap pads utilized by only one child shall be sanitized immediately when soiled or at least weekly.

E. Nap pads and nap cots without mattresses are not acceptable for use in 24 hour programs. Beds, cribs, or roll away cots are the only acceptable bedding for 24 hour centers.

10-10 Play Equipment

A. Play equipment, toys, and materials shall be provided that meet the standards of the Consumer Product Safety Commission and/or the American Society for Testing and Materials (ASTM) for juvenile products. Play equipment, toys, and materials shall be found to be appropriate to the development needs, individual interests, and ages of the children as identified as age-appropriate by a label provided by the manufacturer on the product package.

B. Projectile toys, i.e., dart guns, toy guns, etc., are prohibited.

C. Water play tables, if used, shall be cleaned and sanitized daily.

D. Tricycles and other riding toys used by the children shall be spokeless, steerable, and of a size appropriate for the child, and shall have low centers of gravity. All such toys shall be in good condition and free of sharp edges or protrusions that may injure the children. When not in use, such toys shall be stored in a location where they will not present a physical obstacle to the children and employees. Riding toys shall be inspected at least monthly for protrusions and rough edges that could lead to injury.

10-11 School Age Programs

A. The foregoing provisions in Section X shall not be applied to any facility licensed solely for School age children unless specifically required in this Section 10-11.

B. All playgrounds and playground equipment used by children 2 - 12 years of age shall meet the safety standards set forth in Appendix "D" of these regulations.

C. Projectile toys are prohibited. Projectile toys are toys which, when projected, have the ability to penetrate body or eye tissue. Play equipment, toys, and materials shall be provided that meets the standards of the Consumer Product Safety Commission and/or the American Society for Testing and Materials (ASTM) for juvenile products.

D. Possessions, belongings and extra clothing for each school age child must be stored in such a manner as to not touch those of another child.

XI. BUILDINGS AND GROUNDS

11-1 Building

A. A child care facility shall be physically separated from any other business or enterprise. Other occupants, visitors, and/or employees of other businesses or enterprises within the same building shall not be allowed within the physical confines of the child care facility for the purpose of entering the building or exiting the building, or passing through the child care facility for the purpose of gaining access to another part of the building.

B. All child care facility buildings shall meet all fire safety standards listed on the MSDH Form #333 and all applicable local fire safety standards and/or ordinances.

C. No house trailers, relocatable classrooms, or portable buildings shall be used to house a child care facility unless such structure was originally designed specifically for educational purposes and meets the Mississippi State Department of Education's current standards for a relocatable classroom. Further, such portable structure shall meet all applicable fire safety codes.

Current licensees operating facilities housed in such structures are exempted from this provision. Any change of ownership, need for major renovation, or other significant change in the facility's status shall revoke such exemption.

D. Plans and specifications shall be submitted to the licensing agency for review and approval on all proposed construction and/or major renovations.

E. A separate space shall be provided for the use of an ill or injured child until the child can be picked up by the parent. Space shall be located in an area that is supervised at all times by an employee.

F. Separate space for infants and toddlers shall be provided, away from older children, except in facilities licensed for 12 or fewer children.

G. The floor and/or floor covering shall be properly installed, kept clean and in good condition, and maintained in good repair. Carpeting is prohibited in kitchen areas.

H. All parts of the child care facility used by children shall be lead-safe, well lighted, ventilated, and free of hazardous or potentially hazardous conditions, such as but not limited to, open stairs and unprotected low windows.

All buildings intended for use as a child care facility constructed before 1965 shall be tested for lead. It is the responsibility of the facility applicant/operator to have a lead hazard screen or lead-based paint risk assessment of the facility done by an individual or company certified as a risk assessor by the Mississippi Commission on Environmental Quality. If the facility is found not to be lead-safe, it will not be allowed to operate as a child care facility until all required corrective measures have been taken and the facility is determined to be lead-safe by a certified risk assessor.

I. All glass in doors, windows, mirrors, etc., shall have a protective barrier at least four (4) feet high when measured from the floor. Doors, windows, mirrors, etc., using safety-grade glass or polymer (e.g., Lexan) are not required to have a protective barrier. Glass windows and glass door panels shall be equipped with a vision strip 36 inches from the floor. Safety glass must be so certified by the installer and the statement kept on file at the child care facility.

J. Walls shall be kept clean and free of torn wall covering, chipped paint, broken plaster, and holes. No paint that contains lead compounds shall be applied to interior walls or woodwork.

K. All ceiling lighting shall be shielded completely and encased in shatterproof materials.

L. A child care facility shall have a working telephone available to all staff at all times. Telephones shall also be available for incoming calls and shall not be unplugged or disconnected during business hours.

M. All fire extinguishers, as required in the fire safety plan, shall be serviced on an annual basis by a qualified fire extinguisher technician.

N. Unused electrical outlets shall be protected by a safety plug cover.

O. No extension cords shall be used in areas accessible to children.

P. Every child care facility which uses nonelectric heating and/or cooling systems, cooking stoves, and/or hot water heaters or other nonelectric equipment, shall have sufficient carbon monoxide monitors placed appropriately throughout the child care facility.

11-2 Indoor Square Footage

A. The designated area for children's activities shall contain a minimum of 35 square feet of usable space per child, measured on the inside, wall-to-wall dimensions. These spaces are exclusive of food preparation areas, kitchens, bathrooms, toilets, areas for the care of ill children, offices, staff rooms, corridors, hallways, stairways, closets, lockers, laundries, furnace rooms, fixed or permanent cabinets, fixed or permanent storage shelving spaces, and areas not inhabited and used by children. Usable space shall be areas dedicated to children's activities (play, learning, rest, and eating) and shall be utilized for those purposes on a daily basis. Furnishings shall be equipment which is both size and age-appropriate for children receiving care. The space occupied by inappropriate or adult size equipment shall be deducted the children's usable space.

B. Rooms in which infants both play and sleep shall have a minimum of 40 square feet of usable space per child. There shall be at least two (2) feet between each crib. Cribs with solid ends may be placed end-to-end.

C. Rooms where infants play but do not sleep shall have a minimum of 15 square feet of usable space per child. Note: No other age group shall use this space nor can it be used for any purpose other than infant play.

D. Rooms where infants sleep but do not play shall have a minimum of 25 square feet of usable space per child. There shall be at least two (2) feet between each crib. Cribs with solid ends may be placed end-to-end.

E. Rooms in which toddlers both play and sleep shall have a minimum of 45 square feet of usable space per child. There shall be at least two (2) feet between each crib. Cribs with solid ends may be placed end-to-end. However, if stackable cots, mats, or other storable sleeping equipment are utilized for sleeping the room shall be measured using the standard of 35 square feet per child. Should it be determined that the sleeping equipment is not properly stored when not in use the capacity of the room will be determined using 45 square feet per child.

F. Rooms where toddlers play but do not sleep shall have a minimum of 25 square feet of usable space per child. Note: No other age group shall use this space nor can it be used for any purpose other than toddler play.

G. Rooms where toddlers sleep but do not play shall have a minimum of 25 square feet of usable space per child. There shall be at least two (2) feet between each crib. Cribs with solid ends may be placed end-to-end.

H. Child care facilities shall be measured or remeasured under the following circumstances:

1. Prior to initial opening of a facility;

2. Upon change of ownership of an existing facility;

3. At the completion of any new construction, renovation, or change in the layout/use of space;

4. If the measurement of the facility is not in the licensing agency's facility file; and/or

5. If the licensing officer determines that the facility, or any portion thereof, is overcrowded or utilization of the facility space has changed.

11-3 Openings

A. Each window, exterior door, and basement or cellar hatchway shall be weather tight and watertight.

B. All windows above ground level in areas used by children under five (5) years of age shall be constructed, adapted, or adjusted to limit the exit opening accessible to children to less than six (6) inches, or be otherwise protected with guards that do not block outdoor light.

C. Openable windows shall be of a safety type (not fully openable) that are child proofed and screened when open. When there are no openable windows, or when windows are not kept open, rooms shall be adequately ventilated.

D. All openings used for ventilation shall be screened.

E. The width of doors shall accommodate wheelchairs and the needs of individuals with physical disabilities.

F. Exit doors shall open outward. Boiler room doors shall swing inward.

G. Doorways and exits shall be free of debris and equipment to allow unobstructed traffic to and from the room.

H. The hand contact and splash areas of doors and walls shall be covered with an easily cleanable finish, at least as cleanable as an epoxy finish or enamel paint.

11-4 Kitchens

A. Children are not allowed in the kitchen area. In School Age/After School programs children may be allowed in the kitchen but not during times when food is being cooked. Supervision in the kitchen when children are present must meet the staffing requirements as referenced in Section VIII of the regulations.

B. Barriers, approved by the local fire authority, shall be erected and doors shall be closed at all times.

C. The kitchen area shall be designed and constructed so as to be totally enclosed with walls, doors, and/or barriers. Serving counter openings that conform to local fire codes and MSDH food service regulations are permitted.

D. Kitchens shall have the following minimum square footage, based upon the maximum number of children allowed pursuant to the license:

Licensed Capacity	Minimum Sq. Footage
1-50	90 sq. ft.
51-70	150 sq. ft.
71-100	210 sq. ft.
over 100	300 sq. ft.

E. Child care facilities serving 50 or more children shall have a separate, stand alone freezer for storage of frozen foods.

F. All kitchens providing food for child care facilities with 13 or more children, and all kitchens in child care facilities not located in occupied dwellings, shall comply with the Mississippi State Department of Health's *10.0 Regulation Food Code*, with the exception that kitchens in facilities located in an occupied dwelling that are licensed for 13 or more children need not have a separate kitchen to serve the child care facility.

11-5 Toilets and Hand Washing Lavatories

A. Toilets and hand washing lavatories shall be located within the physical confines of child care facility and shall be convenient to outside playground areas.

B. The following ratios shall apply: Toilets, urinals, and hand washing lavatories shall be apportioned at a ratio of 1:15. Urinals shall not exceed 33 percent of the total required toilet fixtures. When the number of children in the ratio is exceeded by one (1), an additional fixture shall be required.

C. The hand washing lavatories located in a diapering area shall not be included in the ratio of hand washing lavatories to children for determining a child care facility's capacity. Diaper changing sinks shall not be used for any other purpose such as, but not limited to, rinsing or washing baby bottles, pacifiers, teething rings, or for food preparation.

D. All hand washing lavatories shall have both hot and cold running water. Hot water temperature shall not exceed 120 degrees Fahrenheit.

11-6 Water

The water supply shall be from a public water system or a private system approved by the Mississippi State Department of Health. Water shall be dispensed by the following:

A. Fountain; or

B. Disposable paper cups; or

C. Labeled cup for each child which shall be washed and sanitized daily.

11-7 Exits

A. At least two (2) separate exit doors shall be provided from every floor level.

B. Exit doors shall be remote from each other.

C. Dead end corridors shall not exceed 20 feet in length.

D. Exit doors necessitating passage through a kitchen shall not be counted as one of the two (2) remote exits.

E. Exit doors shall be a minimum of 32 inches wide and open outward. No single leaf in an exit door shall be less than 28 inches wide nor more than 48 inches wide.

F. Any latch or other fastening device on an exit door shall be provided with a knob, handle, panic bar, or other simple type of releasing device. Dual action door fasteners are not permitted.

G. The force required to fully open exit doors shall not exceed 50 pounds applied to the latch stile (panic bar).

H. An exit door shall not reduce the effective width of a landing.

11-8 Heating, Cooling, and Ventilation

A. A draft-free seasonally appropriate temperature of 65 degrees Fahrenheit to 78 degrees Fahrenheit shall be maintained.

B. All rooms used by children shall be heated, cooled, and adequately ventilated to maintain the required temperatures, and air exchange, and to avoid the accumulation of objectionable odors and harmful fumes.

C. Ventilation may be in the form of openable windows as specified in these regulations.

D. Areas where art and craft activities are conducted shall be well ventilated. In areas where substances are used that create toxic fumes, exhaust hood systems or other devices shall be installed.

E. Electric fans, if used, shall be mounted high on the wall or ceiling or shall be guarded to limit the size of the opening in the blade guard to less than one-half (½) inch.

F. When air cooling is needed, draft-free cooling units shall be used. They shall present no safety hazard to the children.

G. Filters on recirculation systems shall be checked and cleaned or replaced monthly.

H. Window draft deflectors shall be provided.

I. Thermometers that do not present a hazard to children shall be placed on interior walls in every activity area at children's height.

J. Portable, open flame, and kerosene space heaters are prohibited. Portable gas stoves shall not be used for heating.

K. Electric space heaters shall be UL-approved; inaccessible to children; and stable; shall have protective covering; and shall be placed at least three (3) feet from curtains, papers, and furniture.

L. Fireplaces and fireplace inserts shall be screened securely or equipped with protective guards while in use. They shall be properly drafted. The child care facility shall provide evidence of cleaning the chimney at least once a year, or as frequently as necessary to prevent excessive buildup of combustibles in the chimney. Records of chimney cleaning shall be retained in the center files.

M. Heating units that utilize gas shall be installed and maintained in accordance with the manufacture's instructions, are vented properly to the outside, and be supplied with sufficient combustion air as required by the International Fuel Gas Code.

If the area of the state where the facility is located does not utilize the International Fuel Gas Code, the installation and maintenance of any heating units that utilize gas shall be in accordance with the manufacture's instructions and any local ordinances that apply.

It is the responsibility of the licensee to provide to the licensing authority documentation that the heating units meet the above stated standards.

N. Heating units, including water pipes and baseboard heaters hotter than 110 degrees Fahrenheit, shall be made inaccessible to children by barriers such as guards or other devices.

11-9 Outdoor Playground Area

All playgrounds and playground equipment intended for use by children 2-12 years of age shall meet the standards set forth in the Handbook For Public Playground Safety, Publication No. 325, published by the U.S. Consumer Product Safety Commission or its successor as shown in Appendix "D."

A. The child care facility shall be equipped with an outdoor playground area that directly adjoins the indoor facilities or that can be reached by a route free of hazards and is no farther than 1/8 mile (660 feet) from the child care facility. The outdoor playground area shall comprise a minimum of 75 square feet for each child using the outdoor playground area at any one time.

B. If there is less than 75 square feet of accessible outdoor playground space per child, an indoor playground area room that meets the 75-square-feet-per-

child requirement may be used if it provides for types of activities equivalent to those performed in an outdoor playground area.

C. The total outdoor playground area shall accommodate at least 33 percent of the licensed capacity at one time.

D. A rooftop used as an outdoor playground area shall be enclosed with a fence not less than six (6) feet high and designed to prevent children from climbing it. An approved fire escape shall lead from the roof to an open space at the ground level that meets safety standards for outdoor playground areas.

E. The outdoor playground area shall be well arranged so that all areas are visible to staff at all times.

F. The outdoor playground area shall be free of hazards and not less than 30 feet from electrical transformers, high-voltage power lines, electrical substations, railroad tracks, or sources of toxic fumes or gases. Hazards, including but not limited to air conditioner units and utility mains, meters, tanks, and/or cabling shall be inaccessible to children. Fencing at least four (4) feet high shall be provided around the outdoor playground area. Fencing higher than four (4) feet but not to exceed eight (8) feet may be required if the licensing authority determines that a hazard exists. Fencing twist wires and bolts shall face away from the playground.

G. Outdoor playground areas shall be free from unprotected swimming and wading pools, ditches, quarries, canals, excavations, fish ponds, or other bodies of water.

H. Sunlit areas and shaded areas shall be provided by means of open space and tree plantings or other cover in outdoor spaces. Outdoor spaces shall be laid out to ensure ample shaded space for each child.

I. The outdoor playground area shall be enclosed with a fence. The fence shall be at least four (4) feet in height and the bottom edge shall be no more than three and one-half (3 1/2) inches off the ground. There shall be at least two (2) exits from such areas, with at least one (1) remote from the buildings. The gate latch or securing device shall be high enough or of such a type that it cannot be opened by small children. The openings in the fence shall be no greater than three and one-half (3 1/2) inches. The fence shall be constructed to discourage climbing.

J. The soil in outdoor playground areas shall not contain hazardous levels of any toxic chemical or substances. The child care facility shall have soil samples and analyses performed where there is good reason to believe a problem may exist.

K. The soil in outdoor playground areas shall be analyzed for lead content initially. It shall be analyzed at least once every two (2) years where the exteriors of adjacent buildings and structures are painted with lead-containing paint. Lead in soil shall not exceed 500 ppm. Testing and analyses shall be in accordance with procedures specified by the licensing agency.

11-10 Indoor Playground Area

In the event that adequate outdoor space does not exist for an outdoor playground area, an indoor playground area shall be provided. For child care facilities which provide such an indoor playground area the following items apply:

A. The total indoor playground area shall accommodate at least 33 percent of the licensed capacity at one time.

B. The indoor playground area shall be well arranged so that all areas are visible to staff at all times.

C. The indoor playground area shall be free of hazards.

D. Indoor playground areas shall be laid out to ensure ample clearance space for the use of each item: nine (9) feet around fixed items and 15 feet around any moving part. Equipment shall be situated so that clearance space allocated to one piece of equipment does not encroach on that of another piece of equipment.

E. Swings shall have a clearance area of nine (9) feet in all directions beyond the swing beam.

F. All fixed playground equipment shall have a minimum of nine (9) feet clearance space from walkways and other structures that are not used as part of play activities.

G. All equipment shall be arranged so that children playing on one piece of equipment will not interfere with children playing on or running to another piece of equipment.

H. Moving equipment (e.g., swings, merry-go-rounds) shall be located toward the edge or corner of an indoor playground area or shall be designed in such a way as to discourage children from running into the path of moving equipment.

I. All pieces of indoor playground equipment shall be surrounded by a resilient surface of an acceptable depth or by rubber mats manufactured for such use, consistent with the guidelines of the Consumer Product Safety Commission, and the Standard of the American Society for Testing and Materials, extending beyond the external limits of the piece of equipment for at least four (4) feet beyond the fall zone of the equipment. These resilient surfaces shall conform to the standard stating that the impact from falling from the height of the structure will be less than or equal to peak deceleration 200G. Organic materials that support colonization of molds and bacteria shall not be used.

J. Indoor space designated as playground may be used by other individuals when the area is not in use by children attending the facility. However, children of the child care facility shall have priority use of the indoor playground area and the area may not be used by others when children are using it. The indoor playground space shall not count as additional classroom space when determining the maximum capacity of the facility.

11-11 Grounds

A. The grounds, including the outdoor playground area, shall be free of hazardous or potentially hazardous objects.

B. In-ground swimming pools are prohibited unless protected by a six (6) foot fence and a locked gate. All fencing shall be placed at a minimum five (5) feet from the pool edge.

Above ground pools, including decking and pool structures, are prohibited unless protected by a six (6) foot fence and a locked gate. All fencing shall be placed at a minimum ten (10) feet from the pool/deck edge.

C. All paved surfaces shall be well drained to avoid water accumulation and ice formation.

D. All walking surfaces, such as walkways, ramps, and decks, shall have a non-slip finish, and shall be free of holes and sudden irregularities in the surface.

11-12 Garbage Removal

Garbage and trash shall be removed from the child care facility daily and from the grounds at least once a week. Garbage and trash shall be stored inaccessible to the children, and in insect and rodent resistant containers.

11-13 Environmental Health

The child care facility shall comply with all regulations promulgated by the Division of Sanitation of the Mississippi State Department of Health for:

A. Food Service;

B. On-site Wastewater Systems; and

C. Vector (pest) Control

11-14 Pest Control

Any pest control contractor used by a child care facility shall be licensed by the State of Mississippi. Before a pest control contractor is used, it is the responsibility of the operator to ensure that the pest control contractor is properly licensed. Use of agricultural chemicals for pest control is strictly prohibited.

XII. HEALTH, HYGIENE, AND SAFETY

12-1 Employee Health

A. Employees manifesting symptoms or otherwise suspected of having upper respiratory, gastrointestinal, skin, or other serious contagious conditions shall be excluded from work until either free from symptoms or certified by a physician to be no longer infectious.

B. Staff shall use universal precautions when changing diapers or coming into contact with blood, fecal material, or urine. Refer to Appendix "F" for instructions on how to properly wash hands.

C. Staff shall wash their hands upon:

1. Immediately before handling food, preparing bottles, or feeding children;

2. After using the toilet, assisting a child in using the toilet, or changing diapers;

3. After contacting a child's body fluids, including wet or soiled diapers, runny noses, spit, vomit, etc.;

4. After handling pets, pet cages, or other pet objects;

5. Whenever hands are visibly dirty or after cleaning up a child, the room, bathroom items, or toys;

6. After removing gloves used for any purpose; and

7. Before giving or applying medication or ointment to a child or self.

Refer to Appendix "F" for instructions on how to properly wash hands.

12-2 Child Health

A. A child who is suspected of having a serious contagious condition shall be isolated and returned to the parent as soon as possible.

B. A child having a serious contagious condition shall not be allowed to return to the child care facility until they have been certified by a physician to be no longer contagious.

C. Parents of all children shall be notified of a contagious illness in the child care facility as soon as possible.

D. A child with a physical injury shall be treated by a staff member with valid first aid certificate issued by an agent recognized by the licensing authority. A child with a serious physical injury shall be treated by a staff member with valid first aid certificate issued by an agent recognized by the licensing authority and transported to a hospital or medical facility as soon as appropriate.

12-3 Child Hygiene

A. A child's wet or soiled clothing shall be changed immediately.

B. A child's hands shall be washed:

1. Immediately before and after eating;

2. After using the toilet or having their diapers changed;

3. After playing on the playground;

4. After handling pets, pet cages, or other pet objects;

5. Whenever hands are visibly dirty; and

6. Before going home.

C. A child shall have a shower, tub, or sponge bath to ensure bodily cleanliness when necessary.

D. Individual toilet articles (e.g., combs, brushes, toothbrushes, towels, and wash cloths) used by children shall be provided by the parent or child care facility and plainly marked and stored individually in a sanitary manner in areas which promote drying. Single-use and disposable articles are acceptable. Grooming accessories, including but not limited to brushes, combs, barrettes, or picks, shall not be used jointly by children or on children.

12-4 Toys and Equipment

Toys and equipment used by infants or toddlers shall be cleansed daily with a germicidal solution. Refer to "Appendix - H" for instructions on cleaning and disinfection procedures. A recommended resource regarding sanitation of equipment and toys can be found in the National Health and Safety Performance Standards: Guidelines for out of home Childcare, Second Edition (Standard 3.030) website: www.nrc.uchsc.edu

12-5 First Aid Supply

A. A first aid supply shall be kept on-site and easily accessible to employees, but not in reach of the children.

B. A first aid supply shall be taken on all field trips and excursions and shall be easily accessible to employees, but not in reach of the children.

C. Medicine shall be kept out of the reach of the children.

D. All vehicles used by the facility in transporting children shall be equipped with a first aid kit.

E. It is recommended that first aid kits contain the following items, according to American Red Cross guidelines:

- 20 Antiseptic Toweletts
- 50 Plastic Strips (Band Aids)
- 5 Fingertip Bandages
- 5 Knuckle Bandages

- 5 Butterfly Closures
- 5 Non Adherent Pads 2" x 3"
- 2 Sterile Eye Pads
- 1 pressure Bandage 4"
- 1 Bandage Scissors
- 1 Triangular Bandage
- 1 Instant Cold Compress
- 2 Tongue Depressors/Finger Splints
- 1 Elastic Bandage 2: x 5 yards
- 5 3" x 3" Gauze Pads
- 1 Trauma Pad 5" x 9"
- 5 Insect Sting Relief Pads
- 10 First Aid Ointment 1 gr.
- 5 Non Adherent Pads 3: x 4"
- 5 Pair of Examination Gloves
- 2 Conforming Bandage 2" x 5 yards
- 1 Tweezers
- 2 Poison Ivy Relief Treatment
- 1 Booklet “Till Help Arrives”
- 1 Emergency Rescue Blanket
- 1 Adhesive Tape ½" x 5 yards

Some items in this kit may have expiration dates. All first aid kits should be periodically inspected for contents. Depleted and out of date materials should be replaced.

Special attention should be exercised when utilizing first aid supplies or any medication for children who have allergies or other special medical needs.

For additional information on supplies for first aid kits contact your local office of the American Red Cross.

12-6 Animals and Pets

A. Any pet or animal present at a child care facility, indoors or outdoors, shall be in good health, show no evidence of carrying any disease, and be a friendly companion for the children.

B. Dogs or cats, where allowed, shall be immunized for any disease that can be transmitted to humans, and shall be maintained on a flea, tick, and worm control program.

C. All pets shall be cared for as recommended by the regulating health agency. When pets are kept at the child care facility, procedures for their care and maintenance shall be written and followed. When immunizations are required, proof of current compliance signed by a veterinarian shall be on file at the child care facility where the pet is kept.

D. A caregiver shall always be present when children are exposed to animals (including dogs and cats). Children shall be instructed on safe procedures to follow when in close proximity to these animals (e.g., not to provoke or startle them or remove their food). Potentially aggressive animals (e.g., pit bulls, boxers, etc.) shall not be in the same physical space with the children.

E. Each child's hands shall be properly washed after being exposed to animals.

12-7 Fire/Disaster Evacuation Drills

A. Monthly fire/disaster (e.g., tornados, severe weather, floods, earthquakes, hurricanes, etc.) evacuation drills are required and a record of each drill shall be maintained in the facility records; to include date, time, number of children and staff present, and amount of time required to totally exit building.

B. During fire/disaster evacuation drills, all staff and children present shall be required to exit the building.

XIII. NUTRITION AND MEALS

13-1 General

A. A child care facility shall provide adequate and nutritious meals prepared in a safe and sanitary manner.

B. Meal periods are breakfast, lunch, dinner, and snacks. A minimum of 30 minutes shall be scheduled for each breakfast, lunch, and dinner meal period. A minimum of 15 minutes shall be scheduled for each snack meal period.

C. Meals shall be served at tables where each child may be seated.

D. Meals shall be served by employees only.

E. Employees shall wash hands prior to preparing or serving food.

F. Children shall not share food.

13-2 Nutritional Standards

Meals shall meet the nutritional standards as prescribed in Appendix "C" *Minimum Standards for Nutritional Care in Child Care Facilities*.

13-3 Refreshments

Refreshments may be provided by parents only on the occasion of a child's birthday or other special celebration such as: Valentine's Day, Easter, Christmas, Graduation, etc. Food provided to children, including vending machines at the facility, must meet nutritional guidelines as set forth in Appendix "C."

13-4 Sack Lunches

A. In facilities operating more than six (6) hours per day sack lunches prepared by parents may be permitted as included on approved menu plans but shall not exceed one (1) day per month per child. Exceptions may be made for specific activities such as field trips outside the child care facility. Measures to assure proper storage and refrigeration of sack lunches are required of the child care facility.

For programs which operate for three (3) or more days a week, but which operate only one (1) full day during the week, sack lunches provided by parents shall be permitted on that day. These programs shall also meet the requirements set forth in subsection B., below.

B. Facilities operating 6 hours or less per day are allowed to have children bring sack lunches provided all of the following requirements are met:

1. The facility shall have a written policy about sack lunches and a copy shall be given to parents. The policy shall include the requirements 2-8 in this subsection.

2. Each individual child's lunch brought from home shall be clearly labeled with the child's name, the date and the type of food.

3. All food shall be stored at an appropriate temperature until eaten.

4. The food brought from one child's home shall not be fed to another child.

5. Children shall not share their food.

6. Food brought from home shall meet the child's nutritional requirements and the standards set forth in these regulations.

7. If a child's sack lunch does not meet the minimum nutritional standards for child's age the facility shall be required to supplement the lunch with items that meet the nutritional requirements.

8. Parents shall be notified in writing if a child's sack lunch does not meet the nutritional requirements or the child. The notice shall contain instructions as to what foods are proper for a sack lunch.

13-5 Snacks

All snacks shall meet acceptable nutritional standards, as prescribed in Appendix "C" *Minimum Standards for Nutritional Care in Child Care Facilities*. In child care facilities where all the children are present for four (4) hours or less per day during normal hours of operation, snacks may be provided by parents. If any child is present for more than four (4) hours per day on a routine basis the facility shall meet the standard of having snacks prepared by the facility or a permitted catering establishment.

When nutritional standards are not met by snacks provided by parents, it is the child care facility's responsibility to see that children are provided acceptable snacks prepared on-site or by a permitted catering establishment.

XIV. DISCIPLINE AND GUIDANCE

14-1 Prohibited Behavior

The following behaviors are prohibited by anyone (i.e., parent, caregiver, or child) in all child care settings:

A. Corporal punishment, including hitting, spanking, beating, shaking, pinching, biting, and other measures that produce physical pain;

B. Withdrawal or the threat of withdrawal of food, rest, or bathroom opportunities;

C. Abusive or profane language;

D. Any form of public or private humiliation, including threats of physical punishment;

E. Any form of emotional abuse, including rejecting, terrorizing, ignoring, isolating (out of view of a caregiver), or corrupting a child;

F. Use of any food product or medication in any manner or for any purpose other than that for which it was intended;

G. Inappropriate disciplinary behavior includes, but is not limited to, putting soap or pepper in a child's mouth; or

H. Any acceptable disciplinary action that is not age-appropriate for the child or is excessive in time or duration.

14-2 Restraint of a Child

Children shall not be physically restrained except as necessary to ensure their own safety or that of others, and then for only as long as is necessary for control of the situation. Children shall not be given medicines or drugs that will affect their

behavior except as prescribed by a licensed physician and with specific written instructions from the licensed physician for use of the medicines or drugs.

14-3 Time Out

"Time out" that enables the child to regain self-control and keeps the child in visual contact with a caregiver shall be used selectively, taking into account the child's developmental stage and the usefulness of "time out" for the particular child.

“Time out” means that the child is given time away from an activity which involved inappropriate behavior. Isolation from a caregiver is not acceptable. “Time out” is not allowed for children younger than three (3) years of age.

14-4 Children Shall Not Discipline Other Children

Children shall neither be allowed nor be instructed to discipline other children.

XV. TRANSPORTATION

15-1 General

Regardless of transportation provisions, the child care facility is responsible for the safety of the children.

15-2 Requirements

It is required that:

A. All drivers be appropriately licensed;

B. All vehicles have current safety inspection stickers, licenses, and registrations;

C. Insurance adequately covers the transportation of children;

D. Children board or leave the vehicle from the curb-side of the street and/or are safely accompanied to their destinations;

E. A parent is present if the child is delivered home; and

F. Seat restraints are used.

15-3 Occupant Restraints

A. All children will be properly restrained whenever they are being transported in a motor vehicle.

B. No vehicle shall be occupied by more individuals than its rated capacity.

C. No children shall be transported in the front seat of vehicles equipped with passenger-side air bags.

D. All vehicles under 10,000 lbs. GVWR (Gross Vehicle Weight Rated) shall be equipped with occupant restraints appropriate for the age and/or weight of

the children being transported. A child under the age of four (4) shall be transported only if the child is securely fastened in a child safety seat that meets Federal Motor Vehicle Safety Standards (FMVSS, 49 CFR 571.213), which shall be indicated on the child safety seat. The child safety seat shall be appropriate to the child's weight and be installed and used according to the manufacturer's instructions.

E. Vehicles (e.g., school buses) with a GVWR 10,000 lbs. or more shall, at a minimum, meet the current Federal Motor Vehicle Safety Standards (FMVSS) for buses of that size. It is the responsibility of the child care facility operator to have documentation verifying that a bus meets the current FMVSS.

NOTE: Federal Motor Vehicle Safety Standards (FMVSS) means the National Highway and Traffic Safety Administration's standards for motor vehicles and motor vehicle equipment established under section 103 of the Motor Vehicle Safety Act of 1966 (49 CFR Part 571) as they apply to school buses.

15-4 Staff-to-Child Ratio

A. On vehicles with a GVWR of less than 10,000 lbs., the staff-to-child ratio shall be maintained at all times. The driver of the vehicle shall not be counted as a caregiver while transporting the children.

B. On vehicles with at GVWR of 10,000 lbs. or more, the staff-to-child ratio shall be one (1) caregiver to each 25 children or fraction thereof. The driver of the vehicle shall not be counted as a caregiver while transporting the children.

XVI. DIAPERING AND TOILETING

16-1 Diaper Changing Area

Each room in which diaper-wearing children play shall contain a diapering area. A diapering area shall contain a hand washing lavatory with hot and cold running water, a smooth and easily cleanable surface, a plastic-lined, covered garbage receptacle, and sanitizing solution. The hand washing lavatories located in a diapering area shall not be included in the ratio of hand washing lavatories to children for determining a child care facility's capacity nor shall they be used for any other purpose.

16-2 Non-Disposable Diapers and Training Pants

The fecal contents of non-disposable diapers or training pants shall be disposed of into a toilet. The soiled non-disposable diaper or training pants shall then be placed into a plastic bag, sealed, and placed in the child's individual container.

16-3 Disposable Diapers

Disposable diapers shall be placed into a plastic bag and sealed or shall be rolled up and taped securely, then placed into a plastic-lined covered garbage receptacle.

16-4 Potty Chairs

Potty chairs, if used, shall be placed in the bathroom area and sanitized after each child's use.

16-5 Hand Washing

Employees shall wash their hands with soap and running water before and after each diaper change. Individual or disposable towels shall be used for drying. Hand washing sinks at diaper changing stations shall not be used for any other purpose. Example: The diaper changing sink may not be used for washing cups, baby bottles, food, dishes, utensils, etc.

16-6 Parental Consultation

A parent-caregiver consultation is required prior to toilet training.

XVII. REST PERIODS

17-1 Equipment

Each child shall be placed on a separate bed, crib, cot, or mat. Cribs shall be labeled so that the child's name is visible.

17-2 Cleaning of Linens and Bed Coverings

Linens and bed coverings shall be changed immediately when soiled. All linens and bed coverings shall be changed, at a minimum, two (2) times per week.

17-3 Cleaning of Rest Period Equipment

All rest period equipment shall be wiped clean immediately when soiled. All rest period equipment shall be cleaned twice a week with a germicidal solution. Additional cleaning may be required by the licensing authority if there is an outbreak of a communicable disease, including but not limited to, rotavirus, giardiasis, etc., or a noninfectious condition such as, but not limited to, an infestation of head lice.

17-4 Sharing of Rest Period Equipment

At no time will two (2) or more children be allowed to share the same bed, crib, cot, or mat during their time of enrollment, unless it is cleaned with a germicidal solution between each child's use.

XVIII. FEEDING OF INFANTS AND TODDLERS

18-1 Hand Washing

Employees shall wash their hands with soap and water, and dry their hands with individual or disposable towels, before and after each feeding. The infant's and toddler's hands shall be washed with soap and water, and dried with individual or disposable towels, before and after each feeding.

18-2 Bottle Feeding

Infants shall be held while being bottle fed. Bottles shall not be propped at any time. With parental consent and when infants are old enough to hold their own bottles, they may feed themselves without being held. The bottle shall be removed at once when empty or when the child has fallen asleep.

18-3 Formula Storage

Formula shall be labeled with the child's name and placed in the refrigerator upon arrival.

18-4 Baby Food

Foods stored or prepared in jars shall be served from a separate dish for each infant or toddler. Any leftovers from the serving dish shall be discarded. Leftovers in the jar shall be labeled with the child's name, dated, refrigerated, and used within the next 24 hours or discarded.

18-5 Refrigerator

A refrigerator shall be available and easily accessible to the infant's or toddler's room(s).

18-6 Heating Unit and Microwave Use

A. A heating unit for warming bottles and food shall be accessible only to adults.

B. Microwave ovens shall not be used for warming bottles or baby/infant food.

XIX. SWIMMING AND WATER ACTIVITIES

19-1 General

This section shall apply to any child care facility that, as part of its program, allows the children to swim, wade, or participate in any water activities whether on site or at any other location during the time staff have responsibility for children enrolled.

19-2 Lifeguard Supervision

C. Swimming pools, lakes, etc.

1. A person having an American Red Cross lifeguard certificate, or the equivalent as recognized by the licensing agency, shall be present at all swimming and water activities.

2. One (1) lifeguard is required for every 25 children or any portion thereof (i.e., two (2) lifeguards are required for groups of 26 - 50, three (3) for 51 - 75, etc.). This required ratio also includes activities which occur near water such as fishing or beach activities.

3. Lifeguards are not counted in the staff-to-child ratio

4. The staff-to-child ratio shall be maintained at all times.

5. It is the child care facility operator's responsibility to provide adequate certified lifeguards if the pool or lake operator does not.

6. Each child will be tested by a certified lifeguard prior to participating in swimming lessons or any pool activities. Children will be assigned to swim groups according to the results of the test.

7. Staff, as well as lifeguards, shall be responsible for enforcing general safety rules.

8. Staff is responsible for requiring children to obey all swimming/water rules. These rules shall be explained each day that swimming/water activities occur so that all ages can understand what is expected.

B. Wading pools

For activities taking place in wading pools with a water depth of one (1) foot or less the following is required:

1. There shall be a person(s) with a valid CPR certificate and a valid first aid certificate present at all times.

2. The staff-to-child ratio shall be maintained at all times.

3. Wading pools shall be cleaned after each use.

19-3 Health and Safety

A. All piers, floats, and platforms shall be in good repair, and where applicable, the water depth shall be indicated by printed numerals on the deck or planking.

B. There shall be a minimum water depth of 10 feet for a one (1) meter diving board and 13 feet for a three (3) meter board or diving tower.

C. For outdoor swimming areas in natural bodies of water, the bottom shall be cleared of stumps, rocks, and other obstacles.

D. Diving boards shall be mounted on a firm foundation and never on an insecure base, such as a float that can be affected by shifting weight loads and wave action. The entire length of the top surface of diving boards shall be covered with nonskid material. The diving board shall be level. All diving boards shall be installed in accordance with manufacturer's guidelines for the board by professional swimming pool installers who shall certify in writing to the facility that the diving board is adequately installed in accordance with manufacturer's guidelines for the board, in a commercially reasonable manner, located so as to allow a child to safely enter the water from the diving board, and that the diving board is safe for its intended use. Facilities with existing pools equipped with diving boards that

are unable to obtain the required certification within sixty (60) days of the adoption of this regulation shall have the diving boards removed.

E. Swimming pools, when in use, shall be continuously disinfected by a chemical which imparts an easily measured free available residual effect. When chlorine is used, a free chlorine residual of at least 0.4 ppm shall be maintained throughout the pool whenever it is open or in use. If other halogens are used, residuals of equivalent disinfecting strength shall be maintained.

A testing kit for measuring the concentration of the disinfectant, accurate within 0.1 ppm, shall be provided at each swimming pool.

F. Swimming pool water shall be maintained in an alkaline condition as indicated by a pH of not less than 7.2 and not over 8.2. A pH testing kit accurate to the nearest 0.2 pH unit shall be provided at each swimming pool. The alkalinity of the water shall be at least 50 ppm, as measured by the methyl-orange test. The following chart may be used for reference:

pH	**Minimum Free Available Residual Chlorine-mg/L** *(not stabilized with cyanuric acid)*
7.2	0.40
7.3	0.40
7.4	0.40
7.5	0.40
7.6	0.50
7.7	0.60
7.8	0.70
7.9	0.80
8.0	1.00

G. If cyanuric acid is used to stabilize the free available residual chlorine, or if one of the chlorinated isocyanurate compounds is used as the disinfecting chemical in a swimming pool, the concentration of cyanuric acid in the water shall be at least 30 mg/L but shall not exceed 100 mg/L. The free available residual chlorine, of at least the following concentrations, depending upon the pH of the water, shall be maintained:

pH	**Minimum Free Available Residual Chlorine-mg/L** *(cyanuric acid is at least equal to 30 mg/L, but not greater than 100 mg/L)*
7.2	1.00
7.3	1.00
7.4	1.00
7.5	1.00
7.6	1.25
7.7	1.50
7.8	1.75
7.9	2.00
8.0	2.50

H. The water in a swimming pool shall have sufficient clarity at all times so that a black disk, six (6) inches in diameter, is readily visible when placed on a white field at the deepest point of the pool. The pool shall be closed immediately if this requirement cannot be met.

I. For natural bodies of water (e.g., lakes, rivers, streams, etc.), sewage treatment plants or other discharge lines shall not be within 750 feet of swimming areas.

XX. CHILDREN WITH SPECIAL NEEDS

20-1 Facility Adaptation

A. The child care facility areas to be utilized by a child with special needs shall be adapted as necessary to accommodate special devices which may be required for the child to function independently, as appropriate.

B. A separate area shall be available for the purpose of providing privacy for diapering, dressing, and other personal care procedures.

20-2 Activity Plan

A child with special needs shall have an individual activity plan. The individual activity plan shall have been developed by a person with a bachelors or advanced degree in a discipline dealing with disabilities, as appropriate. The individual activity plan shall be reviewed, at a minimum, once every twelve (12) months.

20-3 Caregiver Staff Development

Caregivers serving children with special needs shall receive staff development related to the specific needs of the children served.

20-4 Staffing

Caregiver staffing shall be appropriate and adequate to meet the specific physical and/or developmental needs of the special needs children served at the child care facility. Staff-to-child ratio shall be determined by the needs of the child rather than child's chronological age as based upon the child's individual plan (i.e., individual education plan, individual habilitation plan, individual family service plan, etc.). The facility is encouraged to be an active participant in the child's individual plan development.

XXI. NIGHT CARE

21-1 General

This section shall apply to any child care facility that is open past 11:30 p.m., as part of their regular hours of operation.

21-2 Nutrition

A. A child care facility which is open prior to 7:00 p.m., shall provide a dinner meal period.

B. A child care facility that remains open after 5:00 a.m., shall provide a breakfast meal period.

C. A snack period shall be provided to children in attendance for more than two and one-half (2 ½) hours prior to bedtime.

D. Menu plans for lunch and dinner meals shall be varied. No single menu shall be repeated in a 24 hour period.

21-3 Sleeping

A. Mats shall not be used for sleeping.

B. Bedtime schedules shall be established in consultation with the child's parent.

C. Provisions shall be made in sleeping areas for the use and storage of clothing and personal belongings and they shall be within easy reach of the child using them.

D. A child shall be provided with a bed or cot equipped with a comfortable mattress (a minimum of three (3) inches thick), sheets, a pillow with a pillow case, and a blanket.

E. The upper level of double-deck beds shall not be used for children under 10 years of age. The upper level of double-deck beds are allowed for children 10 years of age or older if a bed rail and safety ladder are provided.

F. Each child shall have clean and comfortable sleeping garments.

21-4 Bathroom Facilities

A. There shall be a bathtub or shower available for children of toddler age or older.

B. Bathtubs and showers shall be equipped to prevent slipping.

C. If night care is provided for infants, there shall be age appropriate bathing facilities for these children.

D. Bathrooms shall be located near the sleeping areas.

E. No children under six (6) years of age shall be left alone or with another child while in the bathtub or shower.

F. All children shall be bathed separately.

G. All children shall be provided an individual washcloth, towel, and soap for bathing, with fresh water for each child.

XXII. SCHOOL AGE CARE

22-1 General

For a child care facility operating pursuant to a license for "School Age Care", the regulations for child care facilities shall apply, except when inconsistent with the requirements of this section and then the requirements of this section take precedence. Programs operating in excess of 16 weeks per year shall meet the more stringent requirements of Sections 22 and 23.

22-2 Enrollment

A child care facility operating pursuant to a license for "School Age Care" shall only enroll school age children (5-12 years of age). These children may not be placed in the same area of a child care facility as preschool children.

22-3 Indoor Square Footage and Grouping

A minimum of 25 square feet of usable indoor floor space, per child per room, shall be maintained for each child. This shall not include hallways, bathrooms, closets, storage rooms, offices, or kitchens. When a room is used for meals, the minimum square footage per child per room requirement will not apply. This standard is only applicable when the program is licensed as school age only. If the school age children are served in conjunction with preschool children under the same license, the preschool square footage standards will apply.

When children are placed in groups, the maximum group size shall be determined by the following chart.

Age of Children in the Group	**MAXIMUM** number of children **ALLOWED** in a group of children this age	**MINIMUM** number of caregivers **REQUIRED** for a group of children this age	**MINIMUM** square footage **REQUIRED** for a group of children this age
5-9 years	20 children	1 caregiver	25 square feet per child
10-12 years	25 children	1 caregiver	25 square feet per child

22-4 Nutrition

A. A snack period shall be provided.

B. On holidays, inclement weather days, or when a child must be in school age care for a full day program, snacks and meals may be provided by the parents if the parents are given and adhere to policies regarding acceptable nutritional standards, as prescribed in Appendix "C" *Minimum Standards for Nutritional Care in Child Care Facilities*. When nutritional standards are

not met by snacks and meals provided by parents, it is the child care facility's responsibility to see that children are provided acceptable snacks and meals, prepared on-site or by a permitted catering establishment.

22-5 Transportation

A. The staff-to-child ratio shall be maintained at all times.

B. The driver of the vehicle may be counted as a caregiver while transporting school age children only.

22-6 Toilets and Hand Washing Lavatories

A. The following ratios shall apply:

Number of Children	Number of Toilets and Hand washing Lavatories
1-30	1 of each
31-60	2 of each
60-90	3 of each

B. For each additional 30 children or portion thereof, add one (1) toilet and one (1) hand washing lavatory.

C. Urinals shall count as one-half (½) a toilet not to exceed 33 percent of the total number of toilets required.

D. Separate facilities for boys and girls shall be provided.

E. School age programs serving only school age children that are located in schools accredited by any organization listed in Section 1-4 (E)(4) are exempt from the requirements for hot water at hand washing lavatories utilized by the children in attendance.

22-7 Playgrounds

School age programs serving only school age children that are located in schools accredited by any organization listed in Section 1-4 (E)(4) are exempt from the requirements of Section10-2 Playground Equipment and Section 11-9 Outdoor Playground Area of these regulations except that playground equipment shall be in good repair.

XXIII. SUMMER DAY CAMP & SCHOOL AGE PROGRAMS

23-1 General

For a child care facility operating pursuant to a license for a "Summer Day Camp" or “School Age Program,” the regulations for child care facilities shall apply, except when inconsistent with the requirements of this section, and then the requirements of this section take precedence.

23-2 Definition

A. A summer day camp is defined as a child care facility which operates during May, June, July, and/or August only, for a minimum of 22 days and a maximum of 16 weeks.

B. A school age program is defined as a child care facility which operates during the school year. These programs may also operate 12 months a year. School age programs that operate 12 months a year shall meet "School Age Program" space requirements for determining maximum capacity.

23-3 Enrollment

Summer day camps and school age programs shall not enroll children under five (5) years of age.

23-4 Maximum Capacity

All children enrolled (including those over 13 years of age) shall be included in calculating the maximum capacity of the facility.

23-5 Summer Day Camp & School Age Program Director Qualifications

A. A summer day camp director shall be at least 21 years of age, and shall have, at a minimum:

1. A bachelor's degree with a minimum of 18 semester hours in elementary or secondary education or a field such as recreation, physical education, psychology (with emphasis in child/adolescent psychology), or special education, or one related to day camp or school age program operations;

OR

2. A two (2) year associate degree in child development technology or related field;

OR

3. A Mississippi Department of Human Services Office for Children and Youth Director's Child Care Credential, or fifteen (15) semester hours credit with a grade of "C" or better from an accredited college or university in courses listed in #1 above with an additional two (2) years of experience as a caregiver or caregiver assistant in a licensed child care facility (Any college course(s) submitted for consideration are subject to approval by the licensing authority);

OR

4. A high school diploma or equivalent (GED) and four (4) years experience in a school age program or four (4) summers in a day camp program.

B. Transcripts shall be provided for review by the licensing agency.

23-6 Caregiver CPR and First Aid Certification

A. All caregivers in summer day camps are required to have current CPR and first aid certification, copies of which shall be kept with their personnel records.

B. In school age programs that operate in a central location there shall be at least one caregiver on the premises at all times the facility is in operation that has a current certification in CPR and first aid. When groups of children are away from the central location for field trips etc., there shall be at least one caregiver with the group that holds a current certification in CPR and first aid.

23-7 Facility Record Storage

Facility records may be retained in the administrative office.

23-8 Indoor Square Footage and Grouping

A. For summer day camps which routinely operate indoors in a permanent structure for two or more hours each day a minimum of 25 square feet of usable indoor floor space, per child per room, shall be maintained for each child. This shall not include hallways, bathrooms, closets, storage rooms, offices, or kitchens. When a room is used for meals, the minimum square footage per child requirement will not apply.

When children are placed in groups, the maximum group size shall be determined by the following chart.

Age of Children in the Group	**MAXIMUM** number of children **ALLOWED** in a group of children this age	**MINIMUM** number of caregivers **REQUIRED** for a group of children this age	**MINIMUM** square footage **REQUIRED** for a group of children this age
5-9 years	20 children	1 caregiver	25 square feet per child
10-12 years	25 children	1 caregiver	25 square feet per child

B. When activities for children are routinely conducted outdoors or off the premises for six (6) or more hours each day, the following requirements shall apply:

1. There shall be a permanent structure that serves as a home base where parents deliver and pick up children.

2. There shall be a minimum of 10 square feet per child usable indoor space available in the event of inclement weather.

C. School age programs require that a minium of 25 square feet of usable indoor floor space, per child per room shall be maintained for each child. This shall not include hallways, bathrooms, closets, storage rooms, offices, or kitchens. When a room is used for meals, the minimum square footage per child requirement will not apply.

23-9 Nutrition

A. For summer day camps or school age programs which routinely operate indoors in a permanent structure, snacks and meals may be provided by the parents if the parents are given and adhere to policies regarding acceptable nutritional standards, as prescribed in Appendix "C" *Minimum Standards for Nutritional Care in Child Care Facilities*. When nutritional standards are not met by snacks and meals provided by parents, it is the summer day camp's or school age program's responsibility to see that children are provided acceptable snacks and meals, prepared on-site or by a permitted catering establishment.

B. For summer day camps operating primarily as an outdoor program away from the home base, the following exceptions shall apply:

1. Milk is not required to be served in programs routinely operating outdoors or off the premises for six (6) or more hours each day.

2. If food is brought from home or catered, there shall be sanitary cold storage available.

3. All summer day camps shall have an adequate water supply. Potable water, from a Mississippi State Department of Health approved source, shall be used for drinking. Fresh water shall be provided daily in closed containers.

23-10 Transportation

A. The staff-to-child ratio shall be maintained at all times.

B. The driver of the vehicle may be counted as a caregiver while transporting the children.

23-11 Toilets and Hand Washing Lavatories

A. The following ratios shall apply:

Number of Children	Number of Toilets and Hand washing Lavatories
1-30	1 of each
31-60	2 of each
60-90	3 of each

B. For each additional 30 children or portion thereof, add one (1) toilet and one (1) hand washing lavatory.

C. Urinals (in boys restrooms) shall count as one-half (½) a toilet not to exceed 33 percent of the total number of toilets required.

D. Separate facilities for boys and girls shall be provided.

E. For summer day camps operating primarily as an outdoor program away from the home base, alternative methods of hand washing may be provided.

23-12 Equipment

Archery equipment, firearms (example: skeet shooting, target practice, etc.), power equipment, and other potentially hazardous items shall be stored in a locked area when not in use. These items shall be used by children only under the direction and supervision of an individual certified by a state or national organization recognized by the Mississippi State Department of Health.

23-13 Immunization Requirements

Children properly enrolled in a Summer Day Camp or School Age Program are not required to have a *Certificate of Immunization Compliance* (MSDH Form 121) in their record.

XXIV. HOURLY CHILD CARE

24-1 General

For a child care facility operating pursuant to a license for an "Hourly Child Care," the regulations for child care facilities shall apply, except when inconsistent with the requirements of this section, and then the requirements of this section take precedence.

24-2 Definition

A. An "Hourly Child Care Facility" is defined as a facility that meets the provisions of these regulations for a "Child Care Facility" and:

1. Limits the care of a child to no more than eight (8) hours per stay not to exceed a total of 45 hours in any calendar month period; and

2. Provides supervised, short term, hourly care on a temporary basis in conjunction with a specific facility or business complex such as, but not limited to, hotels; shopping malls; recreational, sporting, or entertainment facilities.

B. Hourly child care facilities are not appropriate for full time child care and will not be allowed to provide that type of service. When it is determined by the licensing agency that a facility provides child care services on a full time basis, the facility shall meet all requirements for a regular child care facility as set forth in the preceding sections of these regulations.

24-3 Facility Policy and Procedures

A. Parents shall be provided a written statement of policies pertaining to emergency situations, meals, snacks, procedures for releasing a child to parent, and any other information regarding hourly child care facility operation. All policies and procedures will be submitted to the licensing agency and reviewed prior to a license being issued. Written guidelines will be provided to applicants as part of the application packet.

B. The care of a child shall be no more than eight (8) hours per stay and shall not exceed a total of 45 hours in any calendar month period.

C. When business hours exceed 12 hours in a 24 hour period, the program will be reviewed on an individual basis for compliance with regulations addressing evening and overnight care.

24-4 Personnel Requirements

Students in a field study placement, a practicum, or vocational child care training program may not assist in the care of the children in hourly child care facilities.

24-5 Records and Reports

In addition to all records and reports required in these regulations, hourly child care facilities shall maintain a log containing the name, address, and home telephone number of each child along with the date and time of arrival and departure. The hourly child care facility shall maintain information necessary to contact local law enforcement officials and the Mississippi Department of Human Services when a child is left at the facility past its hours of operation, or for an extended period of time.

24-6 Health Records

Sample forms for duplication will be provided to operators to ensure adequate health information is taken on the children served. Only forms that substantially comply with the aforementioned sample forms will be acceptable. Registration forms will include a signed statement which will serve as verification that a child has received all age-appropriate immunizations. Other information to be included on the form will be the home or forwarding telephone numbers and addresses to be used when the parent must be informed of situations or conditions after the child is no longer at the hourly child care facility.

24-7 Program of Activities

Hourly child care facility programs are exempt from the requirement that a planned written program of activities be submitted as part of the licensing process. However, the facility shall provide adequate space and equipment to allow children to choose between quiet and active play. Appropriate toys and books for quiet play shall be maintained in a physically separate area that is a sufficient distance from active play to reduce noise and to assure a quiet, relaxed environment.

24-8 Buildings and Grounds

A. A certificate of inspection and approval by the fire department of the municipality or other political subdivision in which the child care facility is located shall be submitted to the licensing agency with the application and license fee. Except that if no fire department exists where the facility is located, the State Fire Marshall shall certify as to the inspection for safety from fire hazards.

The inspection form to be used for fire inspections shall be MSDH Form #333 and shall be signed by a signatory authority of the fire inspection authority making the inspection.

B. In non-land-based facilities only ground level space with exits directly to the outside will be approved.

C. A written emergency evacuation route shall be posted in a conspicuous location within each room used by children. The plan will be subject to review, evaluation, and approval by the licensing agency.

D. Space requirements shall comply with the standards set forth in these regulations. However, in the absence of adequate outdoor playground area, not less than 25 percent nor more than 50 percent of the space allocated for children three (3) to 13 years of age shall be set aside and dedicated to large muscle development activities. Such areas shall contain appropriate play equipment for large muscle development. Such equipment may include but is not limited to indoor gyms specifically designed and approved for children in the three (3) to 13 years of age group. Final approval of the appropriateness of the equipment to be located in the designated area shall be made by the licensing agency.

E. If outdoor playground space is provided, but inadequate for the maximum capacity of the building, a schedule shall be provided to show how outdoor play time will be made available to all the children. At no time will there be more children on the playground than the maximum number allowed computed at 70 square feet per child. Maximum outdoor playground area capacity shall be posted and adhered to at all times the area is in use.

F. When kitchens are not on-site, the hourly child care facility is required to maintain adequate storage and refrigeration for snacks. Also, food shall be served in disposable containers unless an acceptable method of dishwashing is available (Appendix "E"). All food served shall come from a permitted kitchen or catering facility. Food service shall comply with the standard set in the current *10.0 Regulation Food Code* as published by the Mississippi State Department of Health.

G. The ratio of one (1) hand washing lavatory and one (1) toilet for every 30 children shall be maintained. Separate facilities are required for boys and girls.

24-9 Nutrition

Parents of children being cared for in an hourly child care facility shall be informed in writing of the availability of meals and the following requirements:

A. When a child is in a facility for three (3) or more hours, a snack shall be provided.

B. Children under five (5) years of age will be provided snacks on request, regardless of the length of time spent in the facility.

C. At regular meal times, all children present shall be offered a meal. Regular meal times are defined as follows:

1. Breakfast - between 7 a.m. and 9 a.m.

2. Lunch - between 11 a.m. and 1 p.m.

3. Supper - between 5 p.m. and 7 p.m.

D. All meals shall meet the nutritional standards prescribed in Appendix "C"*Minimum Standards for Nutritional Care in Child Care Facilities*.

24-10 Abuse and Neglect Reports

A. All employees will be informed by the hourly child care facility director of the individual's responsibility in reporting suspected abuse and neglect. Copies of the child abuse law shall be provided to each employee (Appendix "A").

B. Reports of suspected child abuse or neglect will be made to the Mississippi Department of Human Services and/or local law enforcement officials in accordance with state law. Because abused or neglected children requiring immediate attention are often identified after traditional business hours of the Mississippi Department of Human Services, reports of this nature shall also be made to local law enforcement.

C. Hourly child care facility operators and/or directors are encouraged to establish a working relationship with local law enforcement authorities and the Mississippi Department of Human Services. In extreme situations where local county Department of Human Services staff cannot be reached, operators and/or directors will report to the statewide 24-hour Child Abuse Hotline at 1-800-222-8000.

D. Operators and/or directors will work in conjunction with the local law enforcement and the Mississippi Department of Human Services to establish a workable procedure for reporting cases when a child has been left at the hourly child care facility for an extended period of time after business hours or when allowing a child to leave the hourly child care facility will place that child at risk or in potential danger.

XXV. HEARINGS, EMERGENCY SUSPENSIONS, LEGAL ACTIONS AND PENALTIES

25-1 Emergency Suspensions of License

A. Any license issued pursuant to these regulations may be suspended prior to a hearing if the licensing agency has reasonable cause to believe that the operation of the child care facility constitutes a substantial hazard to the health or safety of the children cared for by the child care facility.

B. Whenever a license is to be suspended, the operator or director shall be notified in writing that the license, upon service of the notice, is immediately suspended. The notice shall contain the reason for the emergency suspension, and shall set a date for a hearing, which shall be within 14 days of the service of notice.

25-2 Denial, Revocation, or Suspension of License

The licensing agency may deny, refuse to renew, suspend, revoke, or restrict a license of any child care facility upon one (1) or more of the following grounds:

A. Fraud, misrepresentation, or concealment of a material fact by the operator in securing the issuance or renewal of a license;

B. Conviction of an operator of any crime, if the licensing agency finds that the acts of which the operator has been convicted could have a detrimental effect on the children cared for by the child care facility;

C. Violation of any of the provisions of the act or of these rules and regulations;

D. Any conduct, or failure to act, which is determined by the licensing agency to threaten the health or safety of a child;

E. Failure by the child care facility to have all criminal records and child abuse central registry checks on file at the facility; and/or

F. Information received by the licensing authority as a result of the criminal records check (fingerprinting) or the child abuse central registry check on an operator.

25-3 Notification

A. Prior to the denial, refusal to renew, suspension, revocation or restriction of a license, and at the time of the imposition of any fine, written notice of the contemplated action shall be given to the applicant or person named on the license of the child care facility, at the address on record with the licensing agency. Such notice shall specify the reasons for the proposed action and shall notify the operator of the right to a district level hearing on the matter.

B. Where the contemplated action is the revocation of a license, and when the proposed revocation is based on Section 25-2 (C) or (D) and involves physical harm or injury to a child, no district level hearing will be provided. In such cases, the licensee will be notified of his opportunity for a state level hearing.

25-4 District Level Hearing

A. If requested in writing within 10 calendar days of receipt of said notice, a hearing shall be provided in which the operator or applicant may show cause

why the license should be renewed or should not be denied, suspended, revoked, or restricted, or the fine should not be imposed.

B. Any hearing requested pursuant to Section 25-4(A) shall be held no less than five (5) calendar days and no more than 20 calendar days from the receipt of any request for a hearing, unless an alternate time frame is agreed to by both parties.

C. The district level hearing shall be informal. However, the hearing officer must keep a record of the proceedings and provide the licensee with a written order outlining his decision within 10 calendar days of conclusion of the district level hearing.

D. Within 10 calendar days of the receipt of the district level decision the licensee may make a written request for a new hearing at the state level.

25-5 State Level Hearing

A. At the state level, a hearing officer, appointed by the State Health Officer, shall conduct a hearing to be scheduled within 30 calendar days of receipt of the request for such hearing.

B. Within 30 calendar days of the hearing, or such time frame as determined during the hearing, written findings of fact, together with a recommendation for action, shall be forwarded to the State Health Officer. The State Health Officer shall decide what, if any, action is to be taken on the recommendation within 14 calendar days of receipt of the recommendation. Written notice of the decision of the State Health Officer shall be provided to the operator.

25-6 Appeal

Any operator who disagrees with or is aggrieved by a decision of the licensing agency in regard to the suspension, revocation, or restriction of a license may appeal to the Chancery Court of the county in which the child care facility is located. The appeal shall be filed no later than 30 calendar days after the operator receives written notice of the final administrative action by the licensing agency as to the suspension, revocation or restriction of the license. The operator shall have the burden of proving that the decision of the licensing agency was not in accordance with applicable law and these regulations.

If a facility is allowed to continue to operate during the appeal process, it will remain under the regulation of the licensing agency and will be subject to all current licensure regulations to include, but not limited to, inspection of the facility, review of facility and children's records, submission of all required or requested documents, and payment of all applicable fees and/or fines.

25-7 Injunction

Notwithstanding the existence of any other remedy, the licensing agency may, in the manner provided by law, in term time or in vacation, upon the advice of the Attorney General who shall represent the licensing agency in the proceedings, maintain an action in the name of the state for injunction or other proper remedy against any

person to restrain or prevent the establishment, conduct, management, or operation of a child care facility with or without a license under the act, or otherwise in violation of these regulations.

25-8 Criminal Penalties

Any person establishing, conducting, managing, or operating a child care facility without a license pursuant to these regulations shall be guilty of a misdemeanor, and, upon conviction, shall be fined not more than one hundred dollars ($100.00) for the first offense, and not more than two hundred dollars ($200.00) for each subsequent offense.

25-9 Violations, Penalties, and Fines

A. Any Class I violation of these regulations, in the discretion of the licensing agency, is punishable by a fine of five hundred dollars ($500.00) for a first occurrence and a fine of one thousand dollars ($1000.00) for each subsequent occurrence of the same violation. Each violation is considered a separate offense.

The following are Class I violations:

1. Failure to prevent the death, dismemberment, or permanent disability of a child.

2. Allowing a child to be unattended at a licensed child care facility before or after operating hours.

3. Allowing a child to be unattended when not at the licensed facility but under the care of the licensed facility.

Should a facility be cited for Class I violations on two (2) separate occasions, it may be cause for suspension or revocation of the facility license for habitual noncompliance with the Regulations Governing Licensure of Child Care Facilities.

B. Any Class II violation of these regulations, in the discretion of the licensing agency, is punishable by a fine of fifty dollars ($50.00) for a first occurrence and a fine of one hundred dollars ($100.00) for each subsequent occurrence upon further inspections within the same licensure term. Each violation is considered a separate offense. Example: If a facility is five (5) children over maximum capacity it constitutes five (5) separate Class II violations and would be subject to a two hundred fifty dollar ($250.00) or five hundred dollar ($500.00) fine, whichever is applicable.

The following are Class II violations:

1. Failure to maintain proper staff-to-child ratio (Sections 8-1 and 8-2);

2. Exceeding licensed maximum capacity (Section 1-1(c));

3. Failure to have a proper criminal record check in a personnel record (Section 6-4(A)(7));

4. Failure to have a proper child abuse central registry check in a personnel record (Section 6-4(A)(7));

5. Improper discipline of a child (Sections 14-1, 2, 3, and 5);

6. Allowing a child to leave the child care facility with an unauthorized individual (Section 4-1(b)(3));

7. Violation of an environmental health regulation (Sections 11 and 12);

8. Failure to report a serious occurrence (Section 7-1);

9. Failure to report a communicable disease (Section 7-3);

10. Violation of transportation and safety policies, procedures, and regulations (Sections 4-1 (c)(3) and 15-1, 2, 3, and 4); and

11. Unauthorized individual assigned administrative and supervisory responsibility for the facility when the director is absent or violation of Section 5.7 Director Designee.

12. Failure to have proper (up-to-date) immunization documentation in each child's record and each employee's record.

13. Failure to display license and/or complaint notice in accordance with Section 2-10.

14. Failure to meet conditions or restrictions placed on a license. The fine will be in addition to the immediate closure of the facility for failure to meet any conditions or restrictions as stated on the restricted license (Section 2-2(C)).

15. Failure to comply with the requirements of Section 13-4 Sack Lunches.

16. Failure to have adequate staff on site holding a valid CPR certificate.

17. Failure to have adequate staff on site holding a valid First Aid certificate.

18. The presence of any individual who has failed to satisfy the personnel requirements of Section V.

19. Violation of Section 4-2 Smoking, Tobacco Products, and Prohibited Substances.

20. Failure to meet nutritional standards as listed in Appendix “C.”

21. Altering of documents supporting suitability for employment in a child care facility, i.e., *Letter of Suitability for Employment* or *Child Abuse Central Registry Check*. Refer to: Section V, Personnel Requirements.

Should a facility be cited for Class II violations on four (4) separate inspection dates, it may be cause for suspension or revocation of the facility license for habitual noncompliance with the Regulations Governing Licensure of Child Care Facilities.

C. A Class III violation of these regulations, in the discretion of the licensing agency, is punishable by a fine of twenty-five dollars ($25.00) for each occurrence. A Class III violation is any violation of these regulations not listed as a Class I or Class II violation in Sections 25-9(A) and (B).

D. Unless appealed, all fines shall be payable within in 30 calendar days of being levied. If appealed fines shall be payable within 30 calendar days of final disposition.

E. An operator shall have the right to appeal a fine imposed pursuant to this section of the regulations, in accordance with the policy of the licensing agency. Any appeal of a fine must be filed with the licensing agency within 10 calendar days of being levied.

F. An operator shall not be granted a license, nor shall a license be renewed for any operator with outstanding fines or penalties.

G. If a license expires during the appeal process, it shall be administratively extended and documentation of the extension shall be provided to the licensee. A facility given an administrative extension during the appeal process, shall remain under the regulation of the licensing agency and will be subject to all current licensure regulations to include, but not limited to, inspection of the facility, review of facility and children's records, submission of all required or requested documents, and payment of all applicable fees and/or fines.

XXVI. RELEASE OF INFORMATION

Information in the possession of the licensing agency concerning the license of individual child care facilities may be disclosed to the public, except such information shall not be disclosed in such manner as to identify children or families of children cared for at a child care facility. Nothing in this section shall affect the agency's authority to release findings of investigation into allegations of abuse pursuant to either Sections 43-21-353(8) and Section 43-21-257 Mississippi Code of 1972, annotated.

REGULATIONS GOVERNING LICENSURE
OF
CHILD CARE FACILITIES

§ 43-21-353. Duty to inform state agencies and officials.

(1) Any attorney, physician, dentist, intern, resident, nurse, psychologist, social worker, child care giver, minister, law enforcement officer, public or private school employee or any other person having reasonable cause to suspect that a child is a neglected child or an abused child, shall cause an oral report to be made immediately by telephone or otherwise and followed as soon thereafter as possible by a report in writing to the Department of Human Services, and immediately a referral shall be made by the Department of Human Services to the intake unit and where appropriate to the youth court prosecutor. Upon receiving a report that a child has been abused and that the abusive act would be a felony under state law, the Department of Human Services shall promptly notify the law enforcement agency in whose jurisdiction the abuse occurred and shall notify the district attorney's office within seventy-two (72) hours. The law enforcement agency shall investigate the reported abuse immediately and shall file a preliminary report with the district attorney's office within twenty-four (24) hours and shall file a final report with the district attorney's office within seventy-two (72) hours.

(2) Any report to the Department of Human Services shall contain the names and addresses of the child and his parents or other persons responsible for his care, if known, the child's age, the nature and extent of the child's injuries, including any evidence of previous injuries and any other information that might be helpful in establishing the cause of the injury and the identity of the perpetrator.

(3) The Department of Human Services shall maintain a statewide incoming wide area telephone service or similar service for the purpose of receiving reports of suspected cases of child abuse; provided that any attorney, physician, dentist, intern, resident, nurse, psychologist, social worker, child care giver, minister, law enforcement officer or public or private school employee who is required to report under subsection (1) of this section shall report in the manner required in subsection (1).

(4) Reports of abuse and neglect made under this chapter and the identity of the reporter are confidential except when the court in which the investigation report is filed, in its discretion, determines the testimony of the person reporting to be material to a judicial proceeding.

(5) Reports made under subsection (1) of this section by the Department of Human Services to the law enforcement agency and to the district attorney's office shall include the following, if known to the department:

(a) The name and address of the child;

(b) The names and addresses of the parents;

(c) The name and address of the suspected perpetrator;

(d) The names and addresses of all witnesses. including the reporting party if a material witness to the abuse;

(e) A brief statement of the facts indicating that the child has been abused and any other information from the agency files or known to the social worker making the investigation, including medical records or other records, which may assist law enforcement or the district attorney in investigating and/or prosecuting the case; and

(f) What, if any, action is being taken by the Department of Human Services

(6) In any investigation of a report made under this chapter of the abuse or neglect of a child as defined in Section 43-21-105(m), the Department of Human Services may request the appropriate law enforcement officer with jurisdiction to accompany the department in its investigation, and in such cases the law enforcement officer shall comply with such request.

(7) Anyone who willfully violates any provision of this section shall be, upon being found guilty, punished by a fine not to exceed Five Thousand Dollars ($5,000.00), or by imprisonment in jail not to exceed one (1) year, or both.

(8) If a report is made directly to the Department of Human Services that a child has been abused or neglected in an out-of-home setting, a referral shall be made immediately to the law enforcement agency in whose jurisdiction the abuse occurred and the department shall notify the district attorney's office within seventy-two (72) hours. The law enforcement agency shall investigate the reported abuse immediately and shall file a preliminary report with the district attorney's office within twenty-four (24) hours and shall file a final report with the district attorney's office within seventy-two 72) hours. If the out-of-home setting is a licensed facility, an additional referral shall be made by the Department of Human Services to the licensing agency.

§ 43-21-355. Immunity for reporting information.

Any attorney, physician, dentist, intern, resident, nurse, psychologist, social worker, child care giver, minister, law enforcement officer, school attendance officer, public school district employee, nonpublic school employee, or any other person participating in the making of a required report pursuant to Section 43-21-353 or participating in the judicial proceeding resulting therefrom shall be presumed to be acting in good faith. Any person or institution reporting in good faith shall be immune from any liability, civil or criminal, that might otherwise be incurred or imposed.

REPORTABLE DISEASES - 2001

MISSISSIPPI STATE DEPARTMENT OF HEALTH
(Mississippi Code of 1972 as Amended)

This listing of diseases reportable under the requirements of the State Board of Health is made available for quick reference and posting to assist practitioners and institutions in complying with the rules and regulations. More detailed information is contained in the Rules and Regulations Governing Reportable Diseases, copies of which are available upon request from the Division of Epidemiology, Mississippi State Department of Health, P.O. Box 1700, Jackson, MS 39215-1700.

Class 1 Diseases: Telephone Report Within 48 Hours

Statewide: 1-800-556-0003*
Jackson Calling Area: 576-7725*

Class 2 Diseases: Mail or Telephone Report Within One Week

Mail to: Division of Epidemiology
State Department of Health
P. O. Box 1700
Jackson, MS 39215-1700

or call: 1-800-556-0003 (576-7725 in Jackson calling area)

Case Report Cards for written reports are available through the local health department or the Division of Epidemiology.

All reports made shall include, unless otherwise specified, the patient's name, address, age, race, sex, the disease or condition, the date of onset, method of diagnosis and the person or institution reporting.

Class 1 Diseases - Immediate Report:

Anthrax
Botulism (including foodborne, infant or wound)
Brucellosis
Chancroid
Haemophilus Influenae type B Invasive Disease †‡
Hemolytic-uremic syndrome, post-diarrheal
Hepatitis A
Poliomyelitis
Rabies (human or animal)
Smallpox
Syphilis (including congenital)

Cholera
Creutzfeldt-Jacob Disease, including new variant
Diphtheria
Escherichia coli O157:H7
Encephalitis (Human) Manifestation of illness
HIV Infection, including AIDS
Measles
Neisseria meningitidis Invasive Disease †‡
Pertussis
Plague
Tuberculosis
Tularemia
Typhoid fever
Yellow fever

Any unusual disease or

Any Suspected Outbreak (including foodborne outbreaks)

<u>Class 2 Diseases</u> - <u>Report Within One Week</u>:

Chlamydia trachomatis, gential infection
Dengue
Enterococcus, invasive infection‡, vancomycin resistant
Gonorrhea
Hepatitis (acute, viral only)
Note - Hepatitis A requires Class 1 Report
Infections following body piercing, Excluding ear lobe piercing§
Legionellois
Listeriosis
Rocky Mountain Spotted Fever
Rubella (including congenital)
Lyme Borreliosis
Malaria
Meningitis other than Meningococcal, or *H. influenzae* type b
Mumps
M. Tuberculosis infection (positive TST) in children <16 years of age
Noncholera vibrio disease
Poisonings (including elevated blood lead levels)
Psittacosis
Salmonellosis
Shigellosis
Spinal Cord Injuries
Streptococcus pneumoniae, invasive infection, Antibiotic resistant‡
Streptococcus pneumoniae, Invasive infection in children <5 years of age‡
Tetanus
Trichinosis
Viral Encephalitis in horses and ratites

† usually presents as menigitis or less commonly as cellolitis, epiglottitis, osteomyyelitis, preicarditis or septic arthritis.
Except for rabies and equine encephalitis, diseases occurring in animals are not required to be reported to the Department of Health.

‡ Specimen obtained from normally sterile site.

§ Reportable from June 1, 2001 to May 31, 2002

T:\WP60\FILES\SPECIAL\APPENDIX.B

Nutritional Standards

Introduction

Meals shall meet the nutritional standards as prescribed in this section. A child care facility shall provide adequate and nutritious meals prepared in a safe and sanitary manner.

Healthful diets help children grow, develop, and perform well in learning environments. Healthful diets contain the amounts of essential nutrients and calories needed to prevent nutritional deficiencies and excesses. They provide the right balance of carbohydrate, fat, and protein to reduce risks of chronic diseases, and are part of a full and productive lifestyle. Such diets are obtained from a variety of foods.

Nutrition and feeding practices for children strongly affect the development and long-term health of the child.

Proper nutritional care during the early years is essential for intellectual, social, emotional, and physical growth.

Children must be given a diet that is adequate, but not excessive in water, calories, and all essential nutrients. It is also necessary that an environment is provided which encourages the development of good food habits.

THE GOALS OF A CHILD CARE FACILITY IN RELATION TO NUTRITION SHOULD BE:

1. To help meet the nutritional needs of each infant and child;

2. To provide food with consideration for the child's cultural patterns, food practices, and socialization needs;

3. To encourage the development of healthful food habits; and

4. To provide wholesome food served in a safe, clean, and pleasant environment and in a pleasant and supportive fashion.

FEEDING SCHEDULE FOR CHILDREN ONE YEAR AND OLDER

CHILDREN'S FOOD NEEDS ARE BASED ON THE AMOUNT OF TIME SPENT IN THE CHILD CARE FACILITY.

ANY CHILD IN A CHILD CARE FACILITY AT THE TIME OF SERVICE OF A MEAL OR SNACK WILL BE SERVED THAT MEAL OR SNACK.

Length of stay	Number of snacks	Number of meals
2-5 hours	1	Meals are required only if child is in the child care facility at time of meal service.
5-8 hours	1-2	1
8-10 hours	2	2
12-24 hours	All snacks and meals served when in the child care facility.	All snacks and meals served when in the child care facility.

Child care facilities that are open 24 hours are required to serve three (3) meals and three (3) snacks.

I. Meal Time

Meals and snacks shall be served at regularly scheduled times each day.

The same meal or snack shall not be served more than one time in any 24 hour (one day) period.

No more than four (4) and no less than a two and one-half (2½) hour period must elapse between the beginning of a meal and a snack.

A mid-morning snack or breakfast shall be provided to each child.

Since not all children arrive at the facility at the same time, certain parental options regarding breakfast will be allowed as follows.

1. Parent can feed the child prior to arrival at the child care facility.

2. The parent may have the meal provided by the child care facility.

Either option must be documented and included in the child's record.

If desired, by their own operating policy, a child care facility may restrict bringing of food into the child care facility.

II. Meal Time Environment

Age appropriate utensils and dining area shall be provided.

Children shall not wait longer than fifteen minutes at the table for food to be served.

Sufficient time shall be allowed for children to wash their hands and prepare for the meal.

Meal time shall be used for socialization, and shall be a relaxed, happy time for the children.

A caregiver shall join the children while they are eating.

Food shall not be used as a reward or punishment.

Children shall be encouraged to eat but not forced to eat.

Additional servings shall be provided for the child who requests more food at a meal or snack.

III. Menus

A (2) two week cycle of menu plans shall be submitted annually as part of the renewal process.

Daily menus for all meals and snacks prepared and/or served in the child care facility shall be plainly posted. Any substitution shall be of comparable food value and shall be recorded on the menu and dated.

Menus shall be written at least one week in advance.

Menus shall be posted in the food preparation area.

Menus shall be planned to include food with variety in texture, color, and shape.

Record of dated menus served shall be kept on file for a minimum of one (1) year.

New food shall be introduced to help develop good food habits. Introduce only one new food per meal or snack.

IV. Child Requiring a Special Diet

A child requiring a special diet due to medical reasons, allergic reactions, or religious beliefs, shall be provided meals and snacks in accordance with the child's needs and the written instructions of the child's parent or a licensed physician. Such instructions shall list any dietary restrictions/requirements and shall be signed and dated by the child's parent or physician requesting the special diet. The child care facility may request the parent to supplement food served by the child care facility. When food is supplied by the parent, the child care facility shall be responsible for assuring that it is properly stored and served to the child in accordance with the diet instructions on file at the child care facility. Records of food intake shall be maintained when indicated by the child's physician.

V. Food Preparation

A file of recipes shall be used to prepare the food.

Foods shall be prepared in a form that is easy for children to handle. Bite size pieces and finger foods are suitable.

Foods shall be prepared as close to serving time as possible to preserve nutrients, flavor, and color.

Food should not be highly seasoned. Children need to learn the flavors of food.

Raw vegetables shall not be served to children under two (2) years of age.

VI. Choking Prevention

A caregiver shall join the children while they are eating. This is an opportunity to teach socialization skills, nutrition education, and is a safety measure to help prevent choking.

Children should be taught to sit quietly at snack and mealtimes, to eat slowly, take small bites, and chew well before swallowing.

FOODS WHICH MAY CAUSE CHOKING

Sausage shaped meats (hot dogs)	Pop Corn
Hard Candy	Chips
Nuts	Pretzels
Grapes	Chunks of peanut butter
Gum	Marshmallows
Raisins	Dried Fruits

To Reduce Choking Hazards

Cook food until soft and cut hot dogs into short strips, not round slices. Serve other foods in thin slices or small pieces. Remove bones from meat, chicken, and fish, and also remove seeds and pits from fruit.

VII. Feeding of Infants

Breast milk is the recommended feeding for infants and should be encouraged and supported by child care facility staff. The mother may choose to come to the child care facility to nurse her infant, or may choose to supply bottles of expressed breast milk for the child care facility staff to feed the infant.

A written schedule for feeding the infant shall be provided by the parent and posted for reference by the child care facility staff.

Formula or breast milk shall be brought to the child care facility daily, ready to be warmed and fed. Each bottle shall be labeled with the infant's name and the date.

Bottles should be warmed for (5) five minutes in a pan of hot, not boiling water; **never** microwave. Before feeding, test the temperature by squirting a couple of drops on the back of your hand.

At the end of each feeding, discard any milk left in the bottle.

Baby foods shall be brought in unopened jars and labeled with the infant's name.

Infants shall be held cradled in the arms during feeding. At no time shall an infant be fed by propping a bottle.

Introduction of solid foods to an infant should be done according to the schedule of the Mississippi State Department of Health Infant Feeding Guide.

Solid foods must be spoon-fed. No solid foods shall be fed by bottle or infant feeder without written direction from a physician.

MENU PLANNING

Dietary Guidelines for Americans provide assistance in planning meals for ages (2) two and older, which will promote health and prevent disease.

The guidelines, applied to child care feeding are:

1. Offer a variety of foods;

2. Serve meals and snacks that help maintain a healthy weight;

3. Serve plenty of vegetable, fruits, and grain products;

4. Avoid excessive fat, saturated fat, and cholesterol;

5. Use and serve sugar only in moderation;

6. Use and serve salt and sodium only in moderation; and

7. Promote an alcohol and drug free lifestyle.

MEAL PATTERNS FOR CHILDREN IN CHILD CARE FACILITIES

One, all, or any combination of breakfast, lunch, supper, and supplements between meals (snacks) may be served at child care facilities depending upon the age child and the hours of operation. A pattern for each meal is given that will show how total nutrients needs for the day can be met.

PATTERN	CHILDREN 1 to 2 years	CHILDREN 3 to 5 years	CHILDREN 6 to 12 years
Breakfast			
1. Milk, fluid	½ cup	¾ cup	1 cup
2. Fruit or 100% fruit or vegetable juice	¼ cup	½ cup	½ cup
3. Bread or Bread Alternate including cereal, cold dry or cereal, hot cooked	½ slice ¼ cup or ⅓ ounce ¼ cup	½ slice ⅓ cup or ½ ounce ¼ cup	1 slice ¾ cup or 1 ounce ½ cup

Snack (Supplement) Select 2 out of the 4 components			
1. Milk, fluid	½ cup	½ cup	1 cup
2. Juice or Fruit or Vegetable	½ cup	½ cup	¾ cup
3. Meat or Meat Alternate	½ ounce	½ ounce	1 ounce
4.. Bread or Bread Alternate including cereal, cold dry or hot cooked	½ slice ¼ cup or ⅓ ounce ¼ cup	½ slice ⅓ cup or ½ ounce ¼ cup	1 slice ¾ cup or 1 ounce ½ cup
Lunch or Supper			
1. Milk, fluid	½ cup	¾ cup	1 cup
2. Meat or Poultry or Fish, or egg, or cheese, or cooked dry beans or peas, or peanut butter	1 ounce 1 1 ounce ¼ cup 2 tbsp	1 ½ oz. 1 1 ½ oz. ⅜ cup 3 tbsp.	2 ounces 1 2 ounces ½ cup 4 tbsp
3. Vegetables and/or fruits **Must include at least 2 different vegetables**	¼ cup **2 servings of at least 1 fruit or 1 vegetable**	½ cup **2 servings of at least 1 fruit and 1 vegetable**	¾ cup
4. Bread or Bread Alternate	½ slice	½ slice	1 slice

[1]Cooked, lean meat without bone.

Meal Pattern Points To Remember

Keep in mind the following points when you plan menus to meet meal pattern requirements for each of the food groups.

Meat and Meat Alternates

* For menu variety, use meat and cheese in combination (1 ounce of meat and ½ ounce of cheese).

* Dried beans or peas (Remember: does not count for both vegetable and meat alternate in the same meal).

* When serving nuts and seeds, they may fulfill:
(a) full requirement for the snack but;
(b) no more than one-half of the requirement for lunch or supper.

Fruits and Vegetables

*Use only 100-percent-strength juice for breakfast. Juice drinks with at least 50-percent-strength juice may be used for snack and lunch. (Caution: children must be served double the volume of these drinks to meet the requirement).

* Fruit-flavored drinks, ades, or punches contain less than 50-percent-strength juice. These types of beverages may be served but are not credited toward meeting the requirement.

* Juice should not be served as part of the snack when milk is the only other component. It is poor menu planning to offer such a combination since it provides too much liquid for children.

* Juice or syrup from canned fruit does not count as fruit juice.

* Use a different combination of two or more servings for lunch. Include various forms such as raw or cooked, fresh, frozen, canned in juices, or dried.

* Avoid serving two forms of the same fruit or vegetable in the same meal. Example: an orange and orange juice or an apple and applesauce are combinations that should not be used. **Serve a variety of vegetables and fruits to ensure a nutritionally well-balanced meal.**

* Small amounts (less than ⅛ cup) of onions, relish, catsup, salsa, jams, jellies, or other condiments may be added for flavor or garnish as "other foods," but do not count as a fruit or vegetable.

Bread and Bread Alternates

* Use whole-grain or enriched breads and bread alternatives, or whole-grain, enriched, or fortified cereals. Read labels on commercial products to guide you.

* Foods such as cake and pie crust, and items usually served as desserts, cannot be used as bread alternates. Crust used as part of the main dish (i.e., for pizza or quiche) is allowed as a bread alternate.

* The bread requirement cannot be met with snack foods such as popcorn, hard pretzels, chips, or other low-moisture items made from grain.

* Cookies cannot be used for the bread requirement at breakfast, lunch, or supper.

* Doughnuts cannot be served to meet the bread requirement at lunch or supper.

Milk

* Milk shall be served at Breakfast, Lunch and Supper. Milk may also be served as part of a snack. The milk shall be pasteurized fluid milk, fortified with vitamin A and D. Low fat should not be served to children under two years of age.

SERVE A VITAMIN C FOOD DAILY

Vitamin C:

Fruits

Blackberries
Blueberries
Cantaloupe
Grapefruit juice
Honeydew melon
Kiwi fruit
Mangoes
Tangelos
Orange juice
Papaya
Pineapple juice (Vitamin C added)
Grapefruit
Grapefruit and orange sections
Mandarin orange sections
Raspberries
Strawberries
Oranges

Vegetables

Artichokes
Peppers
Broccoli
Cabbage
Cauliflower
Chicory
Collards
Escarole
Kale
Kohlrabi
Mustard greens
Okra
Asparagus
Plantain
Potatoes
Pumpkin
Snowpeas
Spinach
Endive
Tomatoes
Tomato juice
Turnip greens
Turnips

SERVE A VITAMIN A FOOD EVERY OTHER DAY

Vitamin A:

Fruits

Apricots	Tangerine
Cantaloupe	Mandarin orange sections
Mango	Nectarines
Plums	Watermelon
Cherries (red sour)	Prunes
Peaches	Papaya

Vegetables

Broccoli	Plantain
Carrots	Pumpkin
Chard	Collards
Spinach	Endive
Squash, winter	Escarole
Sweet potatoes	Kale
Tomatoes	Mustard greens
Tomato-vegetable juice	Peas and Carrots
Peppers, sweet, red	Turnip greens
Mixed vegetables	

Revised July 15, 1997

REFERENCES

1. United States Department of Agriculture; Food and Consumer Service; Child and Adult Care Food Program: Nutrition Guidance for Child Care Centers. Alexandria, VA; 1995.

2. US Department of Agriculture, US Department of Health and Human Services; "Nutrition and Your Health: Dietary Guidelines for Americans". Washington, DC; 1995.

3. WIC Program, Mississippi State Department of Health; Infant Feeding Guide, Jackson, MS; 1995.

T:\WP51\FILES\CHILDCAR.REG\APPENDIX.C

Handbook for Public Playground Safety

U.S. Consumer Product
Safety Commission
Washington, DC 20207

Pub. No. 325

U.S. CONSUMER PRODUCT SAFETY COMMISSION
WASHINGTON, D.C. 20207

Dear Colleague:

We're pleased to provide you with the latest edition of the U.S. Consumer Product Safety Commission's (CPSC) *Handbook for Public Playground Safety.*

CPSC created its playground safety guidelines as a detailed working blueprint to help local communities, schools, day care centers, corporations, and other groups build safe playgrounds. This *Handbook* includes technical safety guidelines for designing, constructing, operating, and maintaining public playgrounds. To highlight some of the most important safety issues for parents and community groups, we've developed a "Public Playground Safety Checklist," which can be found on the inside back cover.

Playgrounds are a fundamental part of the childhood experience. They should be safe havens for children. All of us have memories of playing on playgrounds in our neighborhood park and at recess in the schoolyard.

Unfortunately, more than 200,000 children are treated in U.S. hospital emergency rooms each year for injuries associated with playground equipment. Most injuries occur when children fall from the equipment onto the ground.

Many of these injuries can be prevented. To address the issue of falls, these guidelines emphasize the importance of protective surfacing around playground equipment. In this revised edition, we've added information about using shredded tires as a protective surfacing material. Other noteworthy changes here include revised or additional information about maximum equipment height, maintenance, lead paint on playground equipment, use zones, and clothing entanglement on equipment. For a more complete list, check Appendix E.

Since 1981, CPSC has issued its *Handbook for Public Playground Safety.* Communities all across the country build their playgrounds to these safety specifications. We've included here everything we know today about making playgrounds as safe as possible. As new information becomes available, we are committed to getting it to you as soon as possible.

All of our children deserve a safe place to play. Let us work together to make that happen.

Sincerely,

Ann Brown

Ann Brown
Chairman

Table of Contents

Page No.

1. Introduction 1
2. Playground Injuries 2
3. Definitions 2
4. Surfacing 3
5. Use Zones for Equipment 6
6. Layout and Design of Playgrounds 8
7. Installation & Maintenance of Equipment 9
8. Materials of Manufacture & Construction 10
9. General Hazards 11
10. Stairways, Ladders and Handrails 16
11. Platforms, Guardrails and Protective Barriers 18
12. Major Types of Playground Equipment 20
    - 12.1 Climbing Equipment 20
    - 12.2 Merry-Go-Rounds 22
    - 12.3 Seesaws 23
    - 12.4 Slides 24
    - 12.5 Spring Rockers 28
    - 12.6 Swings 28
    - 12.7 Trampolines 30
13. References 31

APPENDICES

Appendix A — Suggested General Maintenance Checklist 32

Appendix B — Entrapment Recommendations and Test Methods 33

Appendix C — Characteristics of Surfacing Materials 38

Appendix D — Description of Loose-Fill Surfacing Materials 40

Appendix E — Noteworthy Revisions to the 1997 Handbook 41

Public Playground Safety Checklist . . . . . Inside Back Cover

1. INTRODUCTION

1.1 Scope

This handbook presents safety information for public playground equipment in the form of guidelines. Publication of the handbook is expected to promote greater safety awareness among those who purchase, install, and maintain public playground equipment.

"Public" playground equipment refers to equipment for use in the play areas of parks, schools, child care facilities, institutions, multiple family dwellings, restaurants, resorts and recreational developments, and other areas of public use. The recommendations in this handbook address the typical user ages 2 through 12 years.

The handbook is intended for use by parks and recreation personnel, school officials, equipment purchasers and installers, and any other members of the general public concerned with public playground safety such as parents and school groups.

The guidelines are not intended for amusement park equipment, equipment normally intended for sports use, soft contained play equipment, equipment found in water play facilities, or home playground equipment. The guidelines also do not apply to fitness trail exercise equipment intended for adult use, provided that these are not located on or adjacent to a children's playground. Equipment components intended solely for the disabled and modified to accommodate such users are also not covered by these guidelines.

Because many factors may affect playground safety, the U.S. Consumer Product Safety Commission (CPSC) believes that guidelines, rather than a mandatory rule, are appropriate. The guidelines are not a mandatory standard. Therefore, the Commission is not endorsing these guidelines as the sole method to minimize injuries associated with playground equipment. The Commission believes, however, that the recommendations in this handbook will contribute to greater equipment safety.

1.2 Background

These guidelines were first published in a two-volume Handbook for Public Playground Safety in 1981. These were superseded by a single-volume handbook in 1991 which was republished in 1994 with some minor revisions. The safety guidelines in the 1991 handbook were based on recommendations provided to the CPSC by COMSIS Corporation in a March 1990, report [**1**]*. Falls and head injuries are the leading hazards associated with public playground equipment.

This handbook contains revisions that are based in part on a staff review of recent changes to a voluntary standard for public playground equipment, ASTM F1487 that was first published in 1993 and revised in 1995 [**2**]. ASTM F1487 contains more technical requirements than this handbook and is primarily intended for use by equipment manufacturers, architects, designers, and any others requiring more technical information. A voluntary standard for home playground equipment, ASTM F1148 [**3**], contains a number of provisions that are similar to the recommendations in this handbook.

The revisions also are based on inputs from interested parties received during and after a playground safety roundtable meeting held at CPSC in October 1996, and letters received in response to a May 1997 request for comments on the proposed revisions.

Two significant changes in this revision are the criteria used to evaluate certain protrusions to minimize clothing entanglement and a reduction in the use zone (formerly fall zone) around certain pieces of playground equipment. Other changes to the 1994 version of the handbook clarify certain recommendations and reduce conflicts with the ASTM voluntary standard. Noteworthy changes are listed in Appendix E.

1.3 General Discussion

The safety of each individual piece of playground equipment as well as the layout of the entire play area should be considered when evaluating a playground for safety. The installation and maintenance of protective surfacing under and around all equipment is crucial.

Because all playgrounds present some challenge and because children can be expected to use equipment in unintended and unanticipated ways, adult supervision is recommended. The handbook provides some guidance on supervisory practices that adults should follow. Appropriate equipment design, layout, and

Numbers in brackets indicate references that are listed at the end of this handbook.

maintenance, as discussed in this handbook, are essential for increasing public playground safety.

A playground should allow children to develop progressively and test their skills by providing a series of graduated challenges. The challenges presented should be appropriate for age-related abilities and should be ones that children can perceive and choose to undertake.

Preschool and school-age children differ dramatically, not only in physical size and ability, but also in their cognitive and social skills. Therefore, age-appropriate playground designs should accommodate these differences with regard to the type, scale, and the layout of equipment. Recommendations throughout this handbook address the different needs of preschool and school-age children; "preschool-age" refers to children 2 through 5 years, and "school-age" refers to children 5 through 12 years. The overlap between these groups is realistic in terms of playground equipment use, and provides for a margin of safety.

The recommendations in this handbook are based on the assumption that the minimum user will be a 2-year-old child. Therefore, playground equipment fabricated in accordance with these recommendations may not be appropriate for children under 2 years of age.

Playground designers, installers and operators should be aware that The Americans with Disabilities Act of 1990 (ADA) prohibits discrimination on the basis of disability in employment, public services, transportation, public accommodations (including many services operated by private entities) and telecommunications. Title III of the legislation includes within the definition of public accommodation: "a park, zoo, amusement park, or other place of recreation; a school, including nursery schools; a day care center; and a gymnasium, health spa, or other places of exercise or recreation." Specific Federal requirements for accessibility to playgrounds by the disabled are expected to be published in the future. These requirements could necessitate changes to existing playgrounds as well as when new playgrounds are planned or existing playgrounds refurbished.

2. PLAYGROUND INJURIES

The U. S. Consumer Product Safety Commission has long recognized the potential hazards that exist with the use of public playground equipment. A Commission study [**4**] of playground equipment-related injuries treated in U.S. hospital emergency rooms indicated that the majority resulted from falls from equipment. These were primarily falls to the ground surface below the equipment rather than falls from one part of the equipment to another part.

Other hazard patterns involved impact by swings and other moving equipment, colliding with stationary equipment, and contact with such hazards as protrusions, pinch points, sharp edges, hot surfaces, and playground debris. Fatal injuries reported to the Commission involved falls, entanglement of clothing or other items on equipment such as slides, entanglement in ropes tied to or caught on equipment, head entrapment in openings, impact from equipment tipover or structural failure, and impact by moving swings.

The recommendations in this handbook have been developed to address the hazards that resulted in these playground-related injuries and deaths. The recommendations include those which address the potential for falls from and impact with equipment, the need for protective surfacing under and around equipment, openings with the potential for head entrapment, the scale of equipment and other design features related to user age, layout of equipment on a playground, installation and maintenance procedures, and general hazards presented by protrusions, sharp edges, and pinch points.

3. DEFINITIONS

Composite Structure — Two or more play structures, attached or directly adjacent, to create one integral unit that provides more than one play activity (e.g., combination climber, slide, and horizontal ladder).

Critical Height — The fall height below which a life-threatening head injury would not be expected to occur.

Designated Play Surface — Any elevated surface for standing, walking, sitting or climbing, or a flat surface greater than 2 inches wide having an angle less than 30° from horizontal.

Embankment Slide — A slide that follows the contour of the ground and at no point is the bottom of the chute greater than 12 inches above the surrounding ground.

Entrapment — Any condition that impedes withdrawal of a body or body part that has penetrated an opening.

Footing — A means for anchoring playground equipment to the ground.

Guardrail — An enclosing device around an elevated platform that is intended to prevent inadvertent falls from the platform.

Infill — Material(s) used in a protective barrier to prevent a user from passing through the barrier e.g., vertical bars, lattice, solid panel, etc.

Loose-Fill Surfacing Material — A material used for protective surfacing in the use zone that consists of loose particles such as sand, gravel, wood fibers, or shredded rubber.

Non-Rigid Component — A component of playground equipment that significantly deforms or deflects during the normal use of the equipment.

Preschool-Age Children — Children 2 years of age through 5 years of age.

Protective Barrier — An enclosing device around an elevated platform that is intended to prevent both inadvertent and deliberate attempts to pass through the barrier.

Protective Surfacing — Surfacing material in the use zone that conforms to the recommendations in Section 4.5 of this handbook.

Roller Slide — A slide that has a chute consisting of a series of individual rollers over which the user travels.

School-Age Children — Children 5 years of age through 12 years of age.

Slide Chute — The inclined sliding surface of a slide.

Stationary play equipment — Any play structure which does not move or does not have components that move during its intended use.

Tot Swing — A swing generally appropriate for children under 4 years of age that provides support on all sides of the occupant.

Tube Slide — A slide in which the chute consists of a totally enclosed tube or tunnel.

Unitary Surfacing Material — A manufactured material used for protective surfacing in the use zone that may be rubber tiles, mats or a combination of rubber-like materials held in place by a binder that may be poured in place at the playground site and cures to form a unitary shock absorbing surface.

Upper Body Equipment — Equipment designed to support a child by the hands only (e.g., horizontal ladder, overhead swinging rings).

Use Zone — The surface under and around a piece of equipment onto which a child falling from or exiting from the equipment would be expected to land.

4. SURFACING

The surface under and around playground equipment can be a major factor in determining the injury-causing potential of a fall. A fall onto a shock absorbing surface is less likely to cause a serious injury than a fall onto a hard surface. Because head impact injuries from a fall have the potential for being life threatening, the more shock absorbing a surface can be made, the greater is the likelihood of reducing severe injuries. However, it should be recognized that some injuries from falls will occur no matter what playground surfacing material is used.

4.1 Determining Shock Absorbency of a Surfacing Material

No data are available to predict precisely the threshold tolerance of the human head to an impact injury. However, biomedical researchers have established two methods that may be used to determine when such an injury may be life threatening.

One method holds that if the peak deceleration of the head during impact does not exceed 200 times the acceleration due to gravity (200 G's), a life threatening head injury is not likely to occur. The second method holds that both the deceleration of the head during impact and the time duration over which the head decelerates to a halt are significant in assessing head impact injury. This latter method uses a mathematical

formula to derive a value known as Head Injury Criteria (HIC) [**5**]. Head impact injuries are not believed to be life threatening if the HIC does not exceed a value of 1,000.

The most widely used test method for evaluating the shock absorbing properties of a playground surfacing material is to drop an instrumented metal headform onto a sample of the material and record the acceleration/time pulse during the impact. Test methods are described in an ASTM Standard Specification for Impact Attenuation of Surface Systems Under and Around Playground Equipment, ASTM F1292 [**6**].

4.2 Critical Height

This is a term originating from Europe and is used to describe the shock absorbing performance of a surfacing material. As used in this publication, the Critical Height for a surfacing material is defined as the maximum height from which the instrumented metal headform, upon impact, yields both a peak deceleration of no more than 200 G's and a HIC of no more than 1,000 when tested in accordance with the procedure described in ASTM F1292. Therefore, the Critical Height of a surfacing material can be considered as an approximation of the fall height below which a life-threatening head injury would not be expected to occur.

The surfacing material used under and around a particular piece of playground equipment should have a Critical Height value of at least the height of the highest designated play surface on the equipment. This height is the fall height for the equipment.

4.3 Fall Heights for Equipment

Recommendations for the fall heights for various pieces of playground equipment are as follows.

Climbers and Horizontal Ladders — The fall height is the maximum height of the structure.

Elevated Platforms Including Slide Platforms — The fall height is the height of the platform.

Merry-Go-Rounds — The fall height is the height above the ground of any part at the perimeter on which a child may sit or stand.

See-Saws — The fall height is the maximum height attainable by any part of the see-saw.

Spring Rockers — The fall height is the maximum height above the ground of the seat or designated play surface.

Swings — Since children may fall from a swing seat at its maximum attainable angle (assumed to be 90° from the "at rest" position), the fall height of a swing structure is the height of the pivot point where the swing's suspending elements connect to the supporting structure.

4.4 Equipment to Which Protective Surfacing Recommendations Do Not Apply

Equipment that requires a child to be standing or sitting at ground level during play is not expected to follow the recommendations for resilient surfacing. Examples of such equipment are sand boxes, activity walls, play houses or any other equipment that has no elevated designated playing surface.

4.5 Acceptability of Various Surfacing Materials

Hard surfacing materials, such as asphalt or concrete, are unsuitable for use under and around playground equipment of any height unless they are required as a base for a shock absorbing unitary material such as a rubber mat. Earth surfaces such as soils and hard packed dirt are also not recommended because they have poor shock absorbing properties. Similarly, grass and turf are not recommended because wear and environmental conditions can reduce their effectiveness in absorbing shock during a fall.

Acceptable playground surfacing materials are available in two basic types, unitary or loose-fill.

Unitary Materials — are generally rubber mats or a combination of rubber-like materials held in place by a binder that may be poured in place at the playground site and then cured to form a unitary shock absorbing surface. Unitary materials are available from a number of different manufacturers, many of whom have a range of materials with differing shock absorbing properties. Persons wishing to install a unitary material as a playground surface should request test data from the manufacturer identifying the Critical Height of the desired material. In addition, site requirements should

TABLE 1 — CRITICAL HEIGHTS (in feet) OF TESTED MATERIALS

MATERIAL	UNCOMPRESSED DEPTH			COMPRESSED DEPTH
	6 inch	9 inch	12 inch	9 inch
Wood Chips*	7	10	11	10
Double Shredded Bark Mulch	6	10	11	7
Engineered Wood Fibers**	6	7	>12	6
Fine Sand	5	5	9	5
Coarse Sand	5	5	6	4
Fine Gravel	6	7	10	6
Medium Gravel	5	5	6	5
Shredded Tires***	10-12	N/A	N/A	N/A

* This product was referred to as Wood Mulch in previous versions of this handbook. The term Wood Chips more accurately describes the product.

** This product was referred to as Uniform Wood Chips in previous versions of this handbook. In the playground industry, the product is more commonly known as Engineered Wood Fibers.

*** This data is from tests conducted by independent testing laboratories on a 6 inch depth of uncompressed shredded tire samples produced by four manufacturers. The tests reported critical heights which varied from 10 feet to greater than 12 feet. It is recommended that persons seeking to install shredded tires as a protective surface request test data from the supplier showing the critical height of the material when it was tested in accordance with ASTM F1292.

be obtained from the manufacturer because, as stated above, some unitary materials require installation over a hard surface while some do not.

Loose-Fill Materials — can also have acceptable shock absorbing properties when installed and maintained at a sufficient depth. These materials include, but are not confined to, sand, gravel, shredded wood products and shredded tires. Loose-fill materials should not be installed over hard surfaces such as asphalt or concrete.

Because loose-fill materials are generally sold for purposes other than playground surfacing, many vendors are unlikely to be able to provide information on the materials' shock absorbing performance. For that reason, CPSC has conducted tests to determine the relative shock absorbing properties of some loose-fill materials commonly used as surfaces under and around playground equipment. Appendix D contains a description of the tested materials. The tests were conducted in accordance with the procedure in the voluntary standard for playground surfacing systems, ASTM F1292. Table 1, above, lists the critical height (expressed in feet) for each of eight materials when tested in an uncompressed state at depths of 6, 9, and 12 inches. The table also reports the critical height when a 9 inch depth of each material was tested in a compressed state.

Table 1 should be read as follows: If, for example, uncompressed wood chips is used at a minimum depth of 6 inches, the Critical Height is 7 feet. If 9 inches of uncompressed wood chips is used, the Critical height is 10 feet. It should be noted that, for some materials, the Critical Height decreases when the material is compressed.

The Critical Heights shown in the above table may be used as a guide in selecting the type and depth of loose-fill materials that will provide the necessary safety for equipment of various heights. There may be other loose-fill materials such as bark nuggets that have shock absorbing properties equivalent to those in the above table. However, CPSC has not conducted any tests on these materials.

The depth of any loose fill material could be reduced during use resulting in different shock-absorbing

properties. For this reason, a margin of safety should be considered in selecting a type and depth of material for a specific use. When loose-fill materials are used, it is recommended that there be a means of containment around the perimeter of the use zone. Also, depending on playground location, weather conditions and frequency of use, frequent maintenance may be necessary to insure adequate depth and to loosen the materials which may have become packed (see additional maintenance discussion in Appendix C).

Installers of playground equipment are encouraged to attach markers to the equipment support posts that indicate the correct level of loose-fill protective surfacing material under and around the equipment. Such markers will assist maintenance workers in determining when replenishment of the material is necessary.

4.6 Other Characteristics of Surfacing Materials

Selection of a surfacing material for a specific location may be governed by the environmental conditions at that location. Appendix C lists some characteristics of surfacing materials that may influence the choice for a particular playground.

5. USE ZONES FOR EQUIPMENT

The use zone is an area under and around the equipment where protective surfacing is required. Other than the equipment itself, the use zone should be free of obstacles that children could run into or fall on top of and thus be injured.

5.1 Recommendations for Use Zones for Different Types of Playground Equipment

5.1.1 Stationary Equipment (excluding slides)

The use zone should extend a minimum of 6 feet in all directions from the perimeter of the equipment.

The use zones of two stationary pieces of playground equipment that are positioned adjacent to one another may overlap if the adjacent designated play surfaces of each structure are no more than 30 inches above the protective surface (i.e., they may be located a minimum distance of 6 feet apart). If adjacent designated play surfaces on either structure exceed a height of 30 inches, the minimum distance between the structures should be 9 feet.

5.1.2 Slides

The use zone in front of the access and to the sides of a slide should extend a minimum of 6 feet from the perimeter of the equipment. Note: This does not apply to embankment slides. However, the following recommendation applies to all slides, including embankment slides.

The use zone in front of the exit of a slide should extend a minimum distance of H + 4 feet where H is the vertical distance from the protective surface at the exit to the highest point of the chute (see Figure 1). However, no matter what the value of H is, the use zone should never be less than 6 feet but does not need to be greater than 14 feet. The use zone should be measured from a point on the slide chute where the slope is less than 5° from the horizontal. If it cannot be determined where the slope is less than 5° from the horizontal, the use zone should be measured from the end of the chute.

The use zone in front of the exit of a slide should never overlap the use zone of any other equipment.

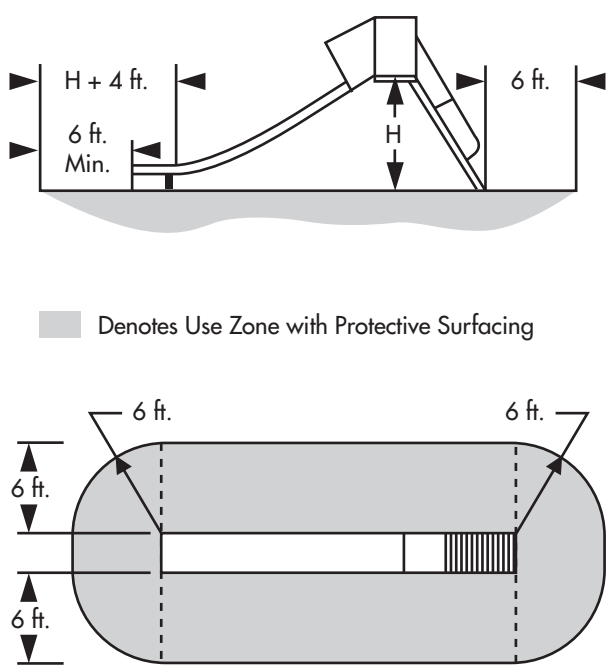

Figure 1. Use Zone for Slides

5.1.3 Single-Axis Swings

Because children may deliberately attempt to exit from a single-axis swing while it is in motion, the use zone in front of and behind the swing should be greater than to the sides of such a swing. It is recommended that the use zone extend to the front and rear of a single-axis swing a minimum distance of twice the height of the pivot point above the surfacing material measured from a point directly beneath the pivot on the supporting structure (see Figure 2). The use zone to the sides of a single-axis swing should follow the general recommendation and extend a minimum of 6 feet from the perimeter of the swing structure in accordance with the general recommendation for use zones. This 6 foot zone may overlap that of an adjacent swing structure.

The use zone to the front and rear of tot swings should extend a minimum distance of twice the height of the pivot point measured from a point directly beneath the pivot to the lowest point on the occupant seating surface when the swing is occupied.

The use zone to the front and rear of single-axis swings should never overlap the use zone of any other equipment.

5.1.4 Multi-Axis Swings

The use zone should extend in any direction from a point directly beneath the pivot point for a minimum distance of 6 feet + the length of the suspending members (see Figure 3). This use zone should never overlap the use zone of any other equipment. In addition, the use zone should extend a minimum of 6 feet from the perimeter of the supporting structure. This 6 foot zone may overlap that of an adjacent swing structure or other playground equipment structure in accordance with the recommendations in Section 5.1.1.

5.1.5 Merry-Go-Rounds

The use zone should extend a minimum of 6 feet beyond the perimeter of the platform. This use zone should never overlap the use zone of any other equipment.

5.1.6 Spring Rockers

The use zone should extend a minimum of 6 feet from the "at rest" perimeter of the equipment.

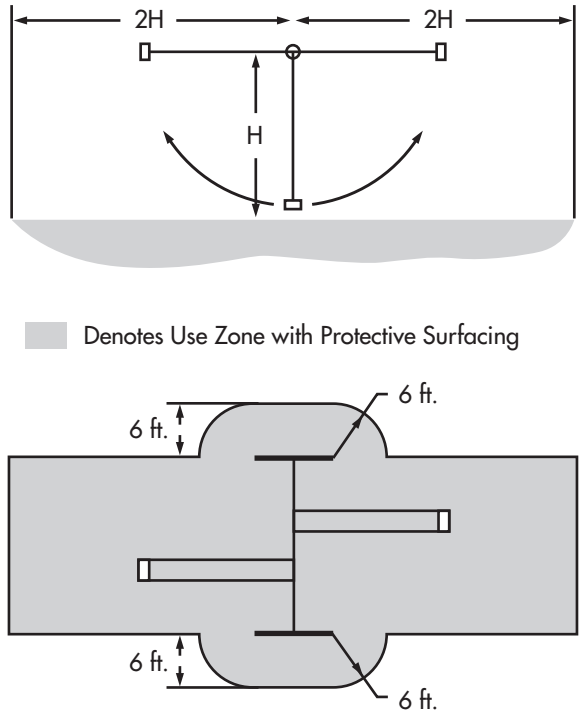

Figure 2. Use Zone for Single-Axis Swings

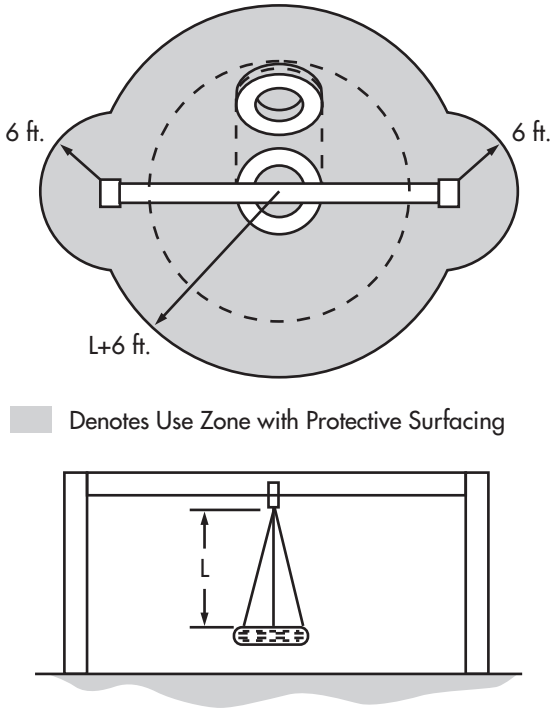

Figure 3. Use Zone for Multi-Axis Swings

5.1.7 Composite Play Structures

The above recommendations for individual pieces of equipment should be used as a guide in establishing the use zone around the perimeter of a composite play structure. Note that in Sections 12.6.2 and 12.6.4 it is recommended that swings not be attached to a composite structure.

In playgrounds where occasional overcrowding is likely, a supplemental circulation area beyond the use zone is recommended. Whether to provide such a supplemental circulation area should be based on the professional judgement of the playground designer and/or owner/operator.

6. LAYOUT AND DESIGN OF PLAYGROUNDS

6.1 Choosing a Site

When planning a new playground, it is important to consider hazards or obstacles to children traveling to or from the playground. A barrier surrounding the playground is recommended if children may inadvertently run into a street. Such a barrier should not prevent observation by supervisors. If fences are used for such barriers, it is recommended that they conform to applicable local building codes.

When selecting a site, consideration should be given to slope and drainage, especially if loose-fill surfacing materials are going to be installed. While a gentle slope may aid in drainage, steep slopes could result in loose fill materials becoming washed away during periods of heavy rain. Such sites may require re-grading.

6.2 Locating Equipment

The playground should be organized into different areas to prevent injuries caused by conflicting activities and children running between activities. Active, physical activities should be separate from more passive or quiet activities. Areas for play equipment, open fields, and sand boxes should be located in different sections of the playground.

In addition, popular, heavy-use pieces of equipment or activities should be dispersed to avoid crowding in any one area. The layout of equipment and activity areas should be without visual barriers so that there are clear sight lines everywhere on the playground to facilitate supervision.

Moving equipment, such as swings and merry-go-rounds, should be located toward a corner, side or edge of the play area while ensuring that the use zones around the equipment, as recommended in Section 5, are maintained. Slide exits should be located in an uncongested area of the playground. Use zones for moving equipment, such as swings and merry-go-rounds, and at slide exits should not overlap the use zone of other equipment, regardless of height.

Composite play structures have become increasingly popular on public playgrounds. Care should be taken to ensure that the play and traffic patterns of children using adjacent components on composite structures are complementary.

6.3 Age Separation of Equipment

It is recommended that for younger children, playgrounds have separate areas with appropriately sized equipment and materials to serve their developmental levels. The following items of playground equipment are not recommended for preschool-age children (2 through 5 years):

- Chain or Cable Walks
- Free Standing Arch Climbers
- Free Standing Climbing Events with Flexible Components
- Fulcrum Seesaws
- Log Rolls
- Long Spiral Slides (more than one turn — 360°)
- Overhead Rings
- Parallel Bars
- Swinging Gates
- Track Rides
- Vertical Sliding Poles

In this handbook, there are several specific recommendations for equipment designed for preschool-age children. These recommendations, together with references to the sections in which they are discussed, are as follows:

- Rung Ladders, Stepladders, Stairways and Ramps (Table 2)

- Handrail Height (10.3.1)
- Guardrails and Protective Barriers (11.3, 11.4, and 11.5)
- Stepped Platforms (11.7)
- Climbers (12.1.2)
- Horizontal Ladders and Overhead Rings (12.1.5)
- Merry-Go-Rounds (12.2)
- Spring Rockers (12.5)
- Single-Axis Swings (12.6.2)
- Tot Swings (12.6.3)

The intended user group should be obvious from the design and scale of equipment. Some playgrounds, often referred to as "tot lots," are designed only for preschool-age children, so separation is not an issue.

In playgrounds intended to serve children of all ages the layout of pathways and the landscaping of the playground should show the distinct areas for the different age groups. The areas should be separated at least by a buffer zone, which could be an area with shrubs or benches. Signs posted in the playground area can be used to give some guidance to adults as to the age appropriateness of the equipment.

6.4 Supervision

Playgrounds that are designed, installed and maintained in accordance with safety guidelines and standards can still present hazards to children in the absence of adequate supervision.

Depending on the location and nature of the playground, the supervisors may be paid professionals (full-time park or school/child care facility staff), paid seasonal workers (college or high school students), volunteers (PTA members), or the parents of the children playing in the playground. The quality of the supervision depends on the quality of the supervisor's knowledge of safe play behavior. Therefore, supervisors should understand the basics of playground safety.

Playground supervisors should be aware that not all playground equipment is appropriate for all children who may use the playground. Supervisors should look for posted signs indicating the appropriate age of the users and direct children to equipment appropriate for their age. Supervisors may also use the information in Section 6.3 of this handbook to determine the suitability of the equipment for the children they are supervising.

It is important to recognize that preschool-age children require more attentive supervision on playgrounds than older children.

7. INSTALLATION AND MAINTENANCE OF EQUIPMENT

7.1 Assembly and Installation

Proper assembly and installation of playground equipment are crucial for structural integrity, stability, and overall safety. The people who assemble and install playground equipment should not deviate from the manufacturer's instructions. After assembly and before its first use, equipment should be thoroughly inspected by a person qualified to inspect playgrounds for safety.

The manufacturer's assembly and installation instructions, and all other materials collected concerning the equipment, should be kept in a permanent file.

7.1.1 Stability

When properly installed as directed by the manufacturer's instructions and specifications, equipment should withstand the maximum anticipated forces generated by active use which might cause it to overturn, tip, slide, or move in any way. Secure anchoring is a key factor to stable installation, and because the required footing sizes and depths may vary according to equipment type, the anchoring process should be completed in strict accordance with the manufacturer's specifications.

7.2 Maintenance

Inadequate maintenance of equipment has resulted in injuries on playgrounds. Because the safety of playground equipment and its suitability for use depend on good inspection and maintenance, the manufacturer's maintenance instructions and recommended inspection schedules should be strictly followed.

A comprehensive maintenance program should be developed for each playground. All equipment should be inspected frequently for any potential hazards, for corrosion or deterioration from rot, insects, or weathering. The playground area should also be checked frequently for broken glass or other dangerous debris. Loose-fill surfacing materials should be inspected to

insure they have not become displaced or compacted in high traffic areas such as under swings and at slide exits. Any damage or hazards detected during inspections should be repaired immediately in accordance with the manufacturer's instructions for repair and replacement of parts.

For each piece of equipment, the frequency of thorough inspections will depend on the type of equipment, the amount of use, and the local climate. Based on the manufacturer's recommendations regarding maintenance schedules for each piece of equipment, a maintenance schedule for the entire playground can be created. The detailed inspections should give special attention to moving parts and other components which can be expected to wear. Inspections should be carried out in a systematic manner by trained personnel.

One possible procedure is the use of checklists. Some manufacturers supply checklists for general or detailed inspections with their maintenance instructions. These can be used to ensure that inspections are in compliance with the manufacturer's specifications. Inspections alone do not constitute a comprehensive maintenance program. All hazards or defects identified during inspections should be repaired promptly. All repairs and replacements of equipment parts should be completed in accordance with the manufacturer's instructions. A general checklist that may be used as a guide for frequent routine inspections of public playgrounds is included at Appendix A. This is intended to address only general maintenance concerns. It does not provide a complete safety evaluation of a specific equipment design and layout. For example, it does not address the risk of falls from equipment, moving impact incidents, or head entrapment. Therefore, the use of this checklist is only for general maintenance purposes. The detailed design recommendations contained in this handbook can be used to evaluate the safety of each piece of equipment and the playground as a whole.

Records of all maintenance inspections and repairs should be retained, including the manufacturer's maintenance instructions and any checklists used. When an inspection is performed, the person performing it should sign and date whatever form is used. A record of any accident and injury reported to have occurred on the playground should also be retained. This will help identify potential hazards or dangerous design features that should be corrected.

8. MATERIALS OF MANUFACTURE AND CONSTRUCTION

8.1 Durability and Finish

Purchasers should be sure that the equipment is manufactured and constructed only of materials that have a demonstrated record of durability in the playground or similar outdoor setting. Any new materials should be documented or tested accordingly for durability by the playground equipment manufacturer.

A major concern for playground equipment materials is corrosion or deterioration. Metals should be painted, galvanized, or otherwise treated to prevent rust.

All paints and other similar finishes must meet the current CPSC regulation for lead in paint [**7**] (0.06% [600 ppm] maximum lead by dry weight). The manufacturer should ensure that, as a result of contact with playground equipment, the users cannot ingest, inhale, or absorb potentially hazardous amounts of preservative chemicals or other treatments applied to the equipment. Purchasers and installers of playground equipment should obtain documentation from the manufacturer that the preservatives or other treatments that have been used do not present a health hazard to the users.

Testing by CPSC and various state and local agencies revealed that some older playground equipment in schools, parks, and communities across the U.S. has leaded paint that over time has deteriorated. When playground equipment paint deteriorates, the resulting chips and dust may be ingested by young children who regularly touch the equipment while playing and then transfer the paint chips or dust from their hands to their mouths. The amount of paint that may be ingested can contribute to a hazardous and unnecessarily high lead exposure.

A strategy for identifying and controlling leaded paint on playground equipment is available from CPSC. A case-by-case approach is recommended since there are many factors to consider when developing a hazard assessment and plans for appropriate controls. Playground managers should consult an October 1996 report, CPSC Staff Recommendations for Identifying and Controlling Lead Paint on Public Playground Equipment [**8**].

Wood should either be naturally rot and insect-resistant or treated to avoid such deterioration. The most common wood treatments used in playground equipment are the inorganic arsenicals. Chromated copper arsenate (CCA) is acceptable for use as a treatment of playground equipment wood, if the dislodgeable arsenic (arsenic that might be removable from the wood surface by skin contact or wiping with testing materials) on the surface of the wood is minimized. Inorganic arsenicals should be applied by the manufacturer or wood preserver in accordance with the specifications of the American Wood Preservers Association C17 standard. This standard states that the treated wood should be visibly free of residues which may contain high levels of arsenic (the greenish coloration of CCA treated wood is acceptable). Wood preservers and playground equipment manufacturers should practice technologies and procedures that minimize the level of dislodgeable arsenic. CPSC has found that technology and practices exist to treat playground equipment wood with CCA so that dislodgeable arsenic is below detectable levels [**9**].

Installers, builders, and consumers who perform woodworking operations such as sanding, sawing, or sawdust disposal on pressure treated wood should read the consumer information sheet often available at the point of sale [**10**]. The sheet contains important health precautions and disposal information. Creosote, petachlorophenol, and tributyl tin oxide are too toxic or irritating and should not be used as preservatives for playground equipment wood. Pesticide-containing finishes should also not be used. Other preservatives that have low toxicity and may be suitable for playground equipment wood are copper or zinc naphthenates, and borates.

8.2 Hardware

When installed and tightened in accordance with the manufacturer's instructions, all fasteners, connectors and covering devices should not loosen or be removable without the use of tools. Lock washers, self-locking nuts, or other locking means should be provided for all nuts and bolts to protect them from detachment. Hardware in moving joints should also be secured against unintentional or unauthorized loosening. In addition, all fasteners should be corrosion resistant and be selected to minimize corrosion of the materials they connect. Bearings used in moving joints should be easy to lubricate or be self-lubricating. All hooks, including S-hooks, should be closed (see also Section 12.6.1). A hook is considered closed if there is no gap or space greater than 0.04 inches. It is appropriate to measure this gap with a feeler gauge but, in the absence of such a gauge, the gap should not admit a dime.

8.3 Metal Surfaces

To avoid the risk of contact burn injury, bare or painted metal surfaces on platforms and slide beds should be avoided unless they can be located out of direct sun. Alternatively, platforms may be wood, plastic or vinyl coated metal and slide beds may be plastic (see also Slides in Section 12.4.4).

9. GENERAL HAZARDS

There are a variety of general hazards common to many types of playground equipment. The guidelines in this section apply to all elements of the playground.

9.1 Sharp Points, Corners, and Edges

There should be no sharp points, corners, or edges on any components of playground equipment that could cut or puncture children's skin. Frequent inspections are important to prevent injuries caused by sharp points, corners, or edges that could develop as a result of wear and tear on the equipment. The exposed open ends of all tubing not resting on the ground or otherwise covered should be covered by caps or plugs that cannot be removed without the use of tools.

Wood parts should be smooth and free from splinters. All corners, metal and wood, should be rounded. All metal edges should be rolled or have rounded capping. There should be no sharp edges on slides. Metal edges on the exit end and the sides along a slide bed can result in serious lacerations if protective measures are not taken (see also Section 12.4.5).

9.2 Protrusions and Projections

⚠ **WARNING:** Children have died when hood or neck drawstrings on their jackets or sweatshirts caught on slides or other playground equipment. Parents are advised to remove hood and neck drawstrings from clothing to prevent entanglement and strangulation.

Protrusions or projections on playground equipment should not be capable of entangling children's clothing, because such entanglement can cause death by strangulation. Particular attention should be given to avoid protrusions or projections on slides to minimize the risk of entanglement with clothing. Jackets and sweatshirts with hoods and/or drawstrings have been involved in such entanglement/strangulation incidents. Jewelry, such as necklaces and rings, has also resulted in injuries from entanglement. The diameter of a protrusion should not increase in the direction away from the surrounding surface towards the exposed end (see Figure 4).

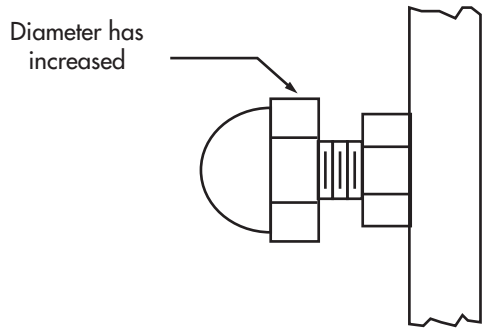

Figure 4. Protrusion Increases in Diameter From Plane of Initial Surface

When tested in accordance with the procedure in Paragraph 9.2.1, no protrusion should extend beyond the face of any of the three gauges having dimensions shown in Figure 5. These gauges may be purchased from the National Recreation and Park Association (NRPA) [**12**].

9.2.1 Protrusion Test Procedure

Successively place each gauge (see Figure 5) over any protrusion or projection and determine if it projects beyond the face of the gauge (see Figure 6).

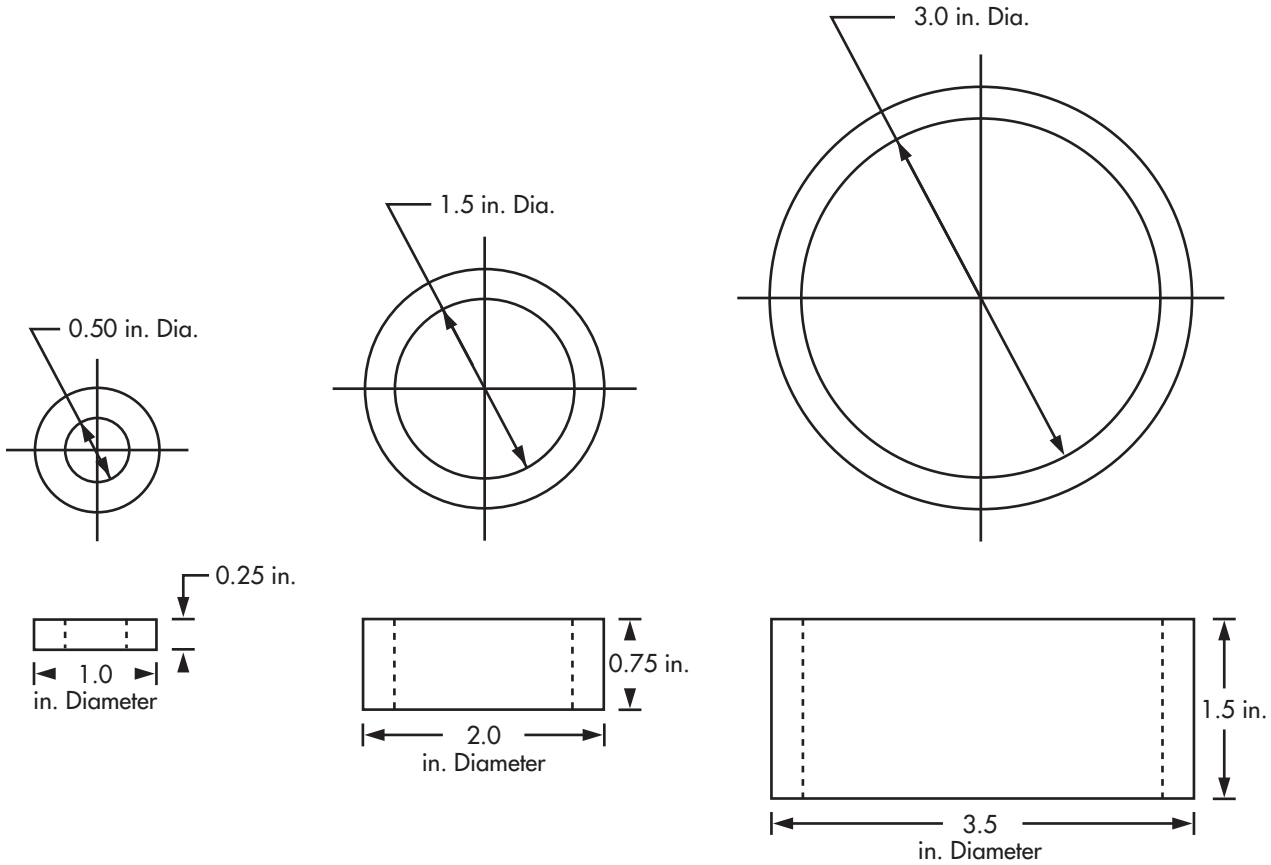

Figure 5. Protrusion Test Gauges

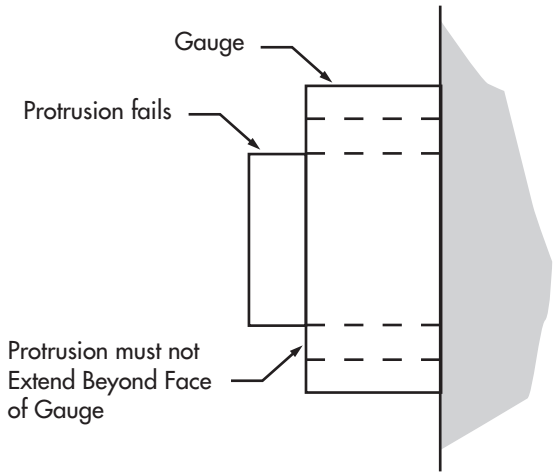

Figure 6. Protrusion Test

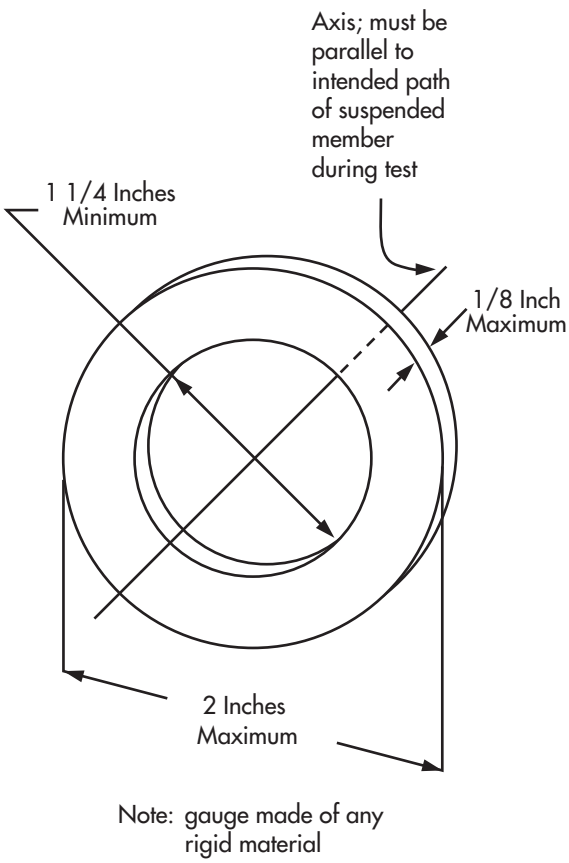

Figure 7. Protrusion Test Gauge for Suspended Swing Assemblies

9.3 Protrusions on Suspended Members of Swing Assemblies

Because protrusions on swings can be extremely hazardous, given the potential for impact incidents, a special test gauge (see Figure 7) and procedure are recommended. No bolts or components in the potential impact region on suspended members should protrude through the hole beyond the face of the specified gauge, when tested in accordance with the following method.

Conduct the test with the suspended member in its rest position. Place the gauge over any protrusion on the front or rear surface of the suspended member such that the axis of the hole in the gauge is parallel to both the intended path of the suspended member and a horizontal plane. Visually determine if the protrusion penetrates through the hole and beyond the face of the gauge.

9.4 Protrusions that Project Upwards and Protrusions on Slides

To minimize the likelihood of clothing entanglement, protrusions that fit within any one of the three gauges shown in Figure 5 and also have a major axis that projects upwards from a horizontal plane should not have projections perpendicular to the plane of the surrounding surface that are greater than 1/8 inch (see Figure 8). This recommendation also applies to protrusions on slides no matter what their orientation if the protrusions fall within the area depicted in Figure 9. NOTE: The underside of a slide chute is not subject to the protrusion recommendation in this section but is subject to the general recommendations for protrusions in Section 9.2. For a slide chute with a circular cross section, the portion of the underside not subject to the protrusion recommendation in this section is shown in Figure 19.

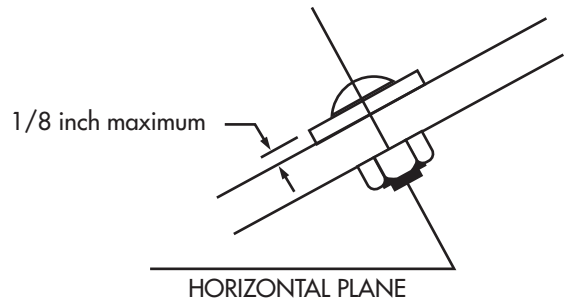

Figure 8. Upwards Facing Protrusion

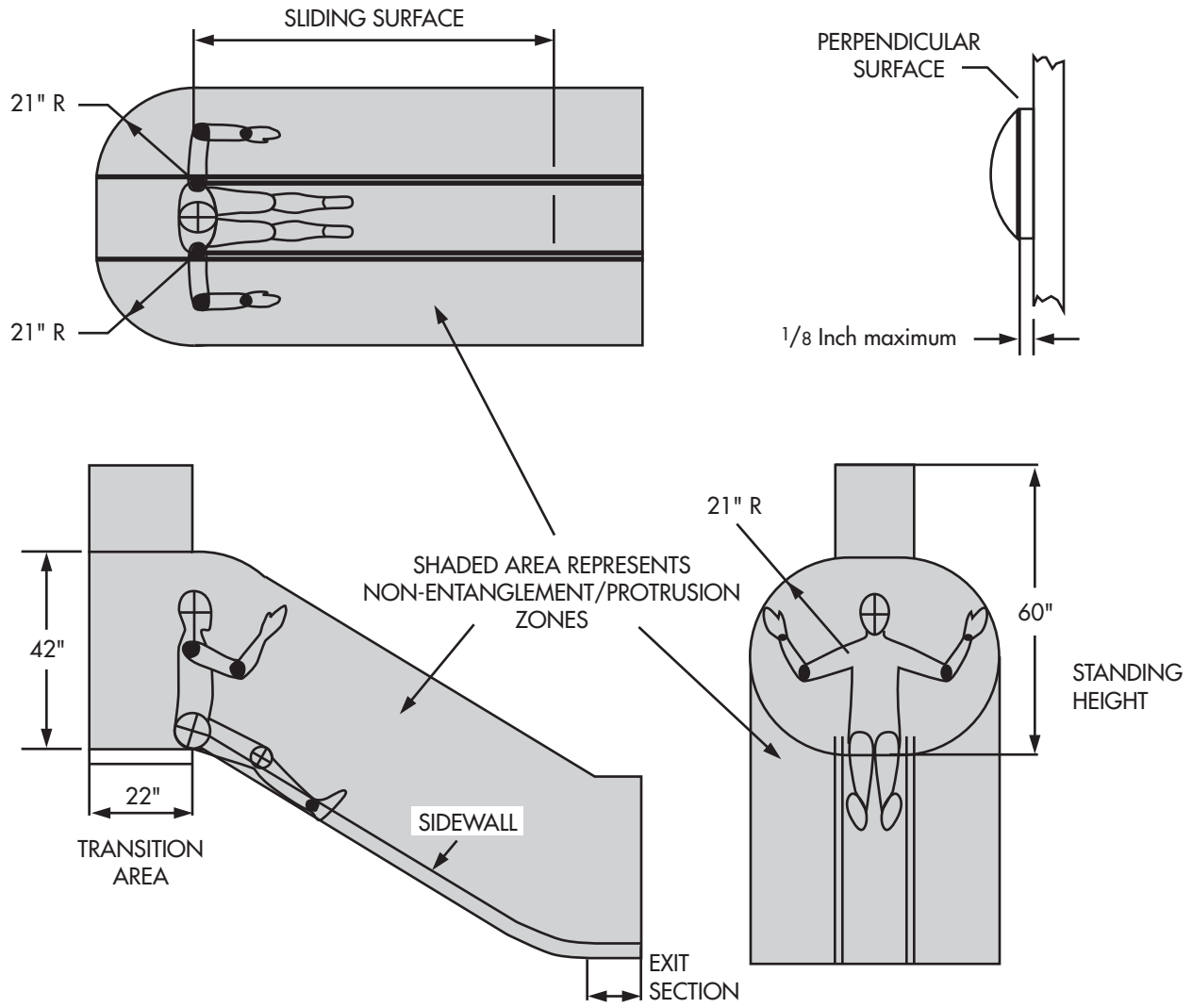

Figure 9. Area on Slides Subject to Protrusion Recommendations in Section 9.4

9.5 Pinch, Crush, and Shearing Points

There should be no accessible pinch, crush, or shearing points on playground equipment that could injure children or catch their clothing. Such points can be caused by components moving relative to each other or to a fixed component when the equipment moves through its anticipated use cycle. To determine if there is a possible pinch, crush or shear point, consider the likelihood of entrapping a body part and the configuration and closing force of the components. Additional information on pinch, crush, and shear points is provided in the recommendations addressing specific pieces of equipment in Section 9.

9.6 Entrapment

9.6.1 Head Entrapment

A component or a group of components should not form openings that could trap a child's head. A child's head may become entrapped if the child enters an opening either feet first or head first. Head entrapment by head-first entry generally occurs when children place their heads through an opening in one orientation, turn their heads to a different orientation, then are unable to withdraw from the opening. Head entrapment by feet-first entry involves children who generally sit or lie down and slide their feet into an opening that is large enough

to permit passage of their bodies but is not large enough to permit passage of their heads.

Generally, an opening presents an entrapment hazard if the distance between any interior opposing surfaces is greater than 3.5 inches and less than 9 inches. When one dimension of an opening is within this range, all dimensions of the opening should be considered together to evaluate the possibility of entrapment. This recommendation applies to all completely-bounded openings (see Figure B-1 in Appendix B) except where the ground serves as an opening's lower boundary. Further, it applies to all openings regardless of their height above the ground (see Figure B-1). Even openings that are low enough for children's feet to touch the ground can present a risk of strangulation for an entrapped child, because younger children may not have the necessary cognitive ability or motor skills to extricate their heads especially if scared or panicked.

To determine whether an opening is hazardous, use the recommended test fixtures, test methods and performance recommendations described in Appendix B. These recommendations apply to all playground equipment for both preschool-age and school-age children. Fixed equipment as well as moving equipment (in its stationary position) should be tested for entrapment hazards. There are two special cases for which separate procedures are given: completely bounded openings where depth of penetration is a critical issue (see Section B5), and openings formed by non-rigid climbing components (see Section B6).

9.6.2 Angles

The angle of any vertex formed by adjacent components should be greater than 55 degrees, unless the lower leg is horizontal or projects downwards (see Figure 10). An exception to this recommendation can be made if a rigid shield is attached to the vertex between adjacent components and the shield is of sufficient size to prevent a 9 inch diameter circular template from simultaneously touching components on either side of the vertex (see Figure 11).

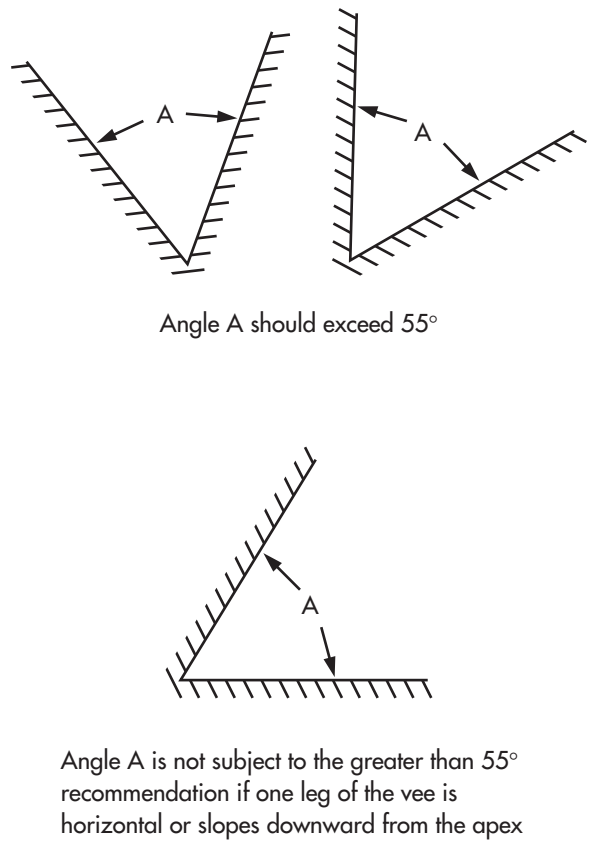

Figure 10. Recommendations for Angles

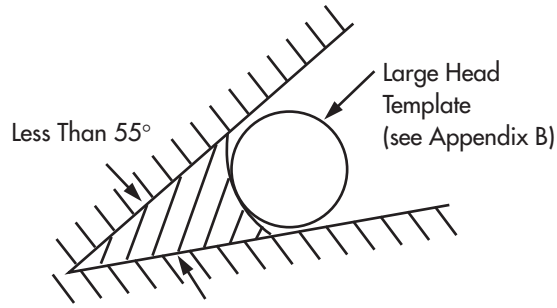

Figure 11. Shield for Angle Less than 55°

9.7 Tripping Hazards

All anchoring devices for playground equipment, such as concrete footings or horizontal bars at the bottom of flexible climbers, should be installed below ground level, beneath the base of the protective surfacing material, to eliminate the hazard of tripping. This will also prevent children who may fall from sustaining additional injuries due to exposed footings.

Low retaining walls are commonly used to help contain loose surfacing materials. In order to minimize trip hazards, retaining walls should be highly visible and any

change of elevation should be obvious. The use of bright colors can contribute to better visibility.

9.8 Suspended Hazards

Cables, wires, ropes, or similar flexible components suspended between play units or from the ground to a play unit within 45 degrees of horizontal should not be located in areas of high traffic because they may cause injuries to a running child. It is recommended that these suspended members be either brightly colored or contrast with surrounding equipment to add to their visibility. This recommendation does not apply to suspended members that are located 7 feet or more above the playground surface.

10. STAIRWAYS, LADDERS AND HANDRAILS

10.1 General

Access to playground equipment can take many forms, such as conventional ramps, stairways with steps, and ladders with steps or rungs. Access may also be by means of climbing components, such as climbing nets, arch climbers, and tire climbers (see Figure 12). Such climbing components are generally intended to be more challenging than stairways and stepladders, and so require better balance and coordination of the children. Rung ladders are generally considered to present a level of challenge intermediate between stairways or stepladders and climbing components.

Rung ladders and climbing components such as climbing nets, arch climbers, and tire climbers, should not be used as the sole means of access to equipment intended for preschool-age children.

Platforms over 6 feet in height (with the exception of free-standing slides) should provide an intermediate standing surface where a decision can be made to halt the ascent and to pursue an alternative means of descent.

10.2 Stairways and Ladders

Stairways, stepladders, and rung ladders are distinguished by the range of slopes permitted for each of these types of access. However, in all cases the steps or rungs should be evenly spaced, including the spacing between the top step or rung and the surface of the platform. Table 2 contains recommended dimensions for:

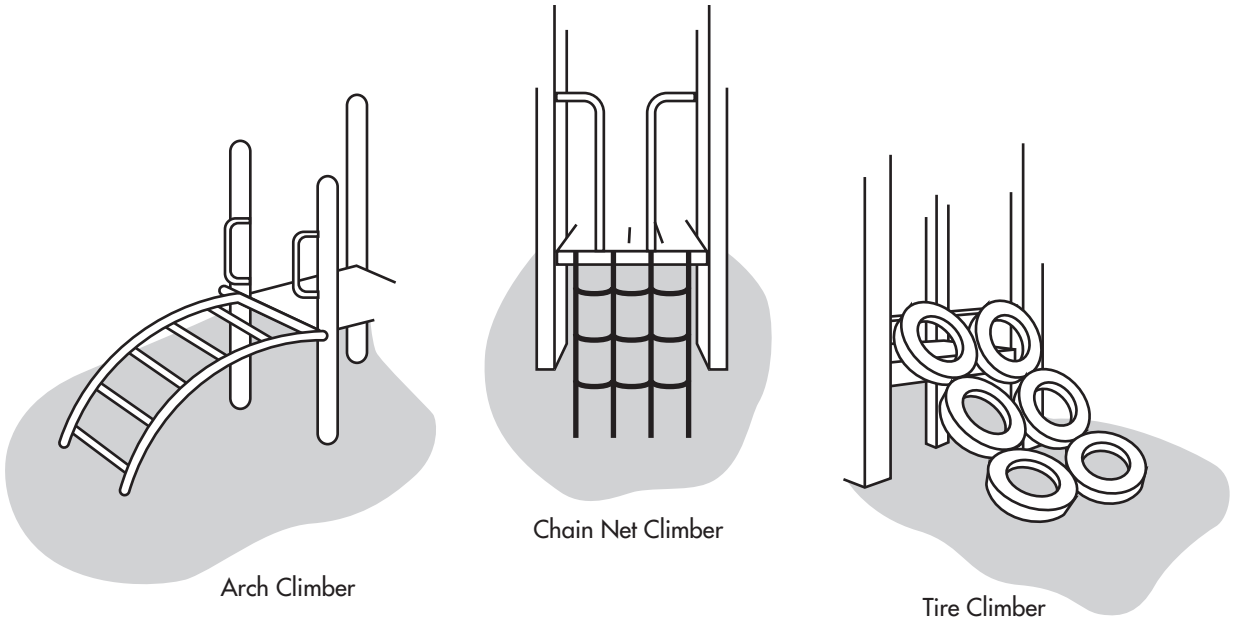

Figure 12. Examples of More Challenging Modes of Access

TABLE 2
Recommended Dimensions for Access Slope, Tread or Rung Width, Tread Depth, Rung Diameter, and Vertical Rise for Rung Ladders, Stepladders, Stairways, and Ramps.

Type of Access	Age of Intended User	
	2-5 Years	5-12 Years
Rung Ladders		
Slope	75°–90°	75°–90°
Rung Width	≥ 12"	≥ 16"
Vertical rise (tread to tread)	≤ 12"**	≤ 12"**
Rung Diameter	0.95"–1.55"	0.95"–1.55"
Stepladders		
Slope	50°–75°	50°–75°
Tread Width – Single File	12"–21"	≥ 16"
– Two-Abreast	*	≥ 36"
Tread Depth – Open Riser	≥ 7"	≥ 3"
– Closed Riser	≥ 7"	≥ 6"
Vertical Rise (tread to tread)	≤ 9"**	≤ 12"**
Stairways		
Slope	≤ 35°	≤ 35°
Tread Width – Single File	≥ 12"	≥ 16"
– Two-Abreast	≥ 30"	≥ 36"
Tread Depth – Open Riser	≥ 7"	≥ 8"
– Closed Riser	≥ 7"	≥ 8"
Vertical Rise (tread to tread)	≤ 9"**	≤ 12"**
Ramps (not intended for access by the disabled)* **		
Slope (vertical:horizontal)	≤ 1:8	≤ 1:8
Width – Single File	≥ 12"	≥ 16"
– Two-Abreast	≥ 30"	≥ 36"

* Not recommended for preschool-age children

** Entrapment provisions apply

*** For information on requirements for access to playground equipment by disabled children contact the U.S. Architectural and Transportation Barriers Compliance Board [**11**].

Note: ≥ means equal to or greater than and
≤ means equal to or less than

access slope, tread or rung width, tread depth, rung diameter, and vertical rise for rung ladders, stepladders, and stairways. Table 2 also contains slope and width recommendations for ramps. However, these recommendations are not intended to address ramps designed for access by wheelchairs.

Openings between steps or rungs and between the top step or rung and underside of a platform should prevent the possibility of entrapment. Risers on stairways and stepladders should be closed if the distance between opposing interior surfaces of consecutive steps is between 3.5 and 9 inches (see Section 9.6). Since the design of rung ladders does not permit risers to be closed, the space between rungs should not be between 3.5 and 9 inches.

When risers are closed, treads of stairways and ladders should prevent the accumulation of sand, water, or other materials on or between steps.

10.2.1 Rungs and Other Handgripping Components

Whereas the steps of stairways and stepladders are used only for foot support, the rungs of rung ladders are used for both foot support and for hand support by a climbing child since rung ladders generally do not have handrails.

Rungs are generally round in cross section and should have a diameter or maximum cross sectional dimension between 0.95 and 1.55 inches. Other components intended to be grasped by the hands such as the bars of climbers should also have a diameter or maximum cross sectional dimension between 0.95 and 1.55 inches.

To benefit the weakest child in each age group, a diameter of 1.25 inches is preferred. All rungs should be secured in a manner that prevents them from turning.

10.3 Handrails

Handrails on stairways and stepladders are intended to provide hand support and to steady the user. Continuous handrails extending over the full length of the access should be provided on both sides of all stairways and stepladders, regardless of the height of the access. Rung ladders do not require handrails since rungs or side supports provide hand support on these more steeply inclined accesses.

10.3.1 Handrail Height

Handrails should be available for use at the appropriate height, beginning with the first step. The vertical distance between the top front edge of a step (tread nosing) and

the top surface of the handrail above it should be as follows:

- Preschool-Age Children: between 22 and 26 inches.
- School-Age Children: between 22 and 38 inches.

10.3.2 Handrail Diameter

The diameter or maximum cross-sectional dimension of handrails should be between 0.95 and 1.55 inches. To benefit the weakest child in each age group, a diameter of 1.25 inches is preferred.

10.4 Transition from Access to Platform

On any transition from an access mode to a platform, handrails or handholds should be adequate to provide support until the child has fully achieved the desired posture on the platform. Any opening between a handrail and an adjacent vertical structure (e.g., vertical support post for a platform or vertical slat of a protective barrier) should not pose an entrapment hazard (see Section 9.6).

On accesses that do not have handrails, such as rung ladders, flexible climbers, arch climbers, and tire climbers, hand support should provide for the transition between the top of the access and the platform. Options include vertical handrails and loop handgrips extending over the top of the access.

11. PLATFORMS, GUARDRAILS AND PROTECTIVE BARRIERS

11.1 Design Considerations

Platforms should be within $\pm 2°$ of a horizontal plane and openings should be provided to allow for drainage.

11.2 Guardrails and Protective Barriers

Either guardrails or protective barriers may be used to prevent inadvertent or unintentional falls off elevated platforms. Protective barriers, however, to provide greater protection, should be designed to prevent intentional attempts by children seeking to defeat the barrier either by climbing over or through the barrier.

For example, guardrails may have a horizontal top rail with infill consisting of vertical bars having openings that are greater than 9 inches. Such openings would not present an entrapment hazard but would not prevent a child from climbing through the openings. A protective barrier should prevent passage of a child during deliberate attempts to defeat the barrier. Any openings between uprights or between the platform surface and lower edge of a protective barrier should prevent passage of the small torso template (see Figure B-3 in Appendix B).

11.3 Minimum Elevation Requiring Guardrails and Protective Barriers

Guardrails or protective barriers should be provided on platforms, walkways, landings, and transitional surfaces in accordance with the following minimum elevation recommendations.

Preschool-Age Children: Since younger children have poorer coordination and balance and are more vulnerable to injury than school-age children, guardrails or protective barriers are warranted at lower elevations. An elevated surface that is more than 20 inches above the protective surfacing should have a guardrail or protective barrier to prevent falls. Guardrails are acceptable for platforms over 20 inches but not over 30 inches high, but a full protective barrier may be preferable for this age group since it affords a greater degree of protection from falls. Protective barriers should always be used for platforms that are over 30 inches above the protective surfacing.

School-Age Children: An elevated surface that is more than 30 inches above the protective surfacing should have a guardrail or protective barrier to prevent falls. For platforms over 30 inches but not over 48 inches high, guardrails are acceptable, although a full protective barrier always provides greater protection. Platforms that are over 48 inches above the protective surfacing should always have a protective barrier.

An elevated surface is exempt from these recommendations if a guardrail or protective barrier would interfere with the intended use of the equipment; this includes most climbing equipment, and platforms that are layered so that the fall height does not exceed 20 inches on equipment intended for preschool-age children or 30 inches on equipment intended for school-age children.

11.4 Minimum Height of Guardrails

The minimum height should prevent the largest child from inadvertently falling over the guardrail. In addition, the guardrail should extend low enough to prevent the smallest child from inadvertently stepping under it (see Figure 13).

Preschool-Age Children: the top surface of guardrails should be at least 29 inches high and the lower edge should be no more than 23 inches above the platform.

School-Age Children: the top surface of guardrails should be at least 38 inches high and the lower edge should be no more than 28 inches above the platform.

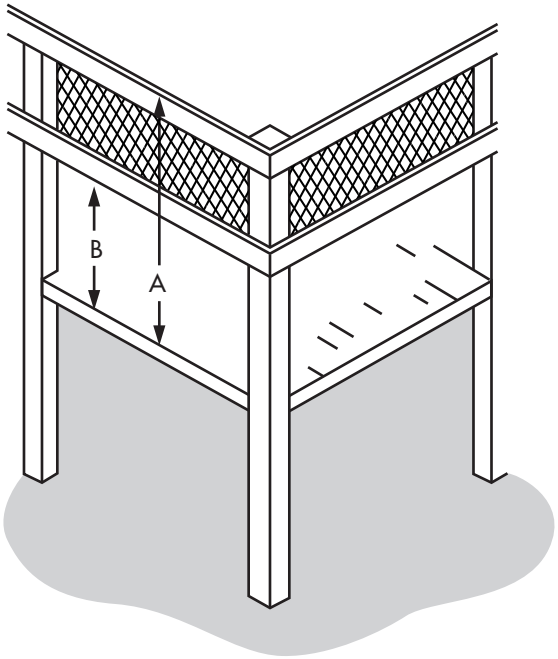

A = 38" minimum for school-age children
29" minimum for preschool-age children

B = 28" maximum for school-age children
23" maximum for preschool-age children

Note: Guardrails should be designed to prevent inadvertent or unintentional falls off the platform, to discourage climbing on the barrier, to prevent the possibility of entrapment, and to aid supervision. Refer to text for detailed recommendations regarding infill.

Figure 13. Guardrails on Elevated Platforms

11.5 Minimum Height of Protective Barriers

The minimum height should prevent the largest child from inadvertently falling over the protective barrier. In addition, because the protective barrier should not permit children to climb through or under it, openings in the barrier should preclude passage of the small torso template (see Section 9.6).

Preschool-Age Children: the top surface of protective barriers should be at least 29 inches high. Vertical infill for protective barriers may be preferable for younger children because the vertical components can be grasped at whatever height a child chooses as a handhold.

School-Age Children: the top surface of protective barriers should be at least 38 inches high.

11.6 Other Design Considerations for Guardrails and Protective Barriers

Guardrails or protective barriers should completely surround an elevated platform except for entrance and exit openings necessary to access a play event.

Both guardrails and protective barriers should be designed to prevent inadvertent or unintentional falls off the platform, preclude the possibility of entrapment, and facilitate supervision. Horizontal cross-pieces should not be used as infill for the space below the top rail because they provide footholds for climbing. When solid panels are used as infill, it is recommended that there be some transparent areas to facilitate supervision and to permit viewing from the platform. To prevent head entrapment, guardrails should conform to the entrapment recommendations in Section 9.6.

11.7 Stepped Platforms

On some composite structures, platforms are layered or tiered, so that a child may fall onto a lower platform rather than the ground surface.

Unless there is an alternate means of access/egress, the maximum difference in height between stepped platforms should be:

- Preschool-Age Children: 12 inches.
- School-Age Children: 18 inches.

The space between the stepped platforms should follow the recommendations for entrapment in enclosed openings in Section 9.6. If the space exceeds 9 inches and the height of the lower platform above the protective surfacing exceeds 30 inches for preschool equipment or 48 inches for school-age equipment, infill should be used to reduce the space to less than 3.5 inches.

12. MAJOR TYPES OF PLAYGROUND EQUIPMENT

12.1 Climbing Equipment

12.1.1 General

The term climbers refers to a wide variety of equipment, including arch climbers, sliding poles, chain or net climbers, upper body equipment (overhead horizontal ladders, overhead rings), dome climbers, parallel bars, balance beams, cable walks, suspension bridges, and spiral climbers, as well as composite structures with linked platforms (see Figure 14 for examples). Climbing equipment is generally designed to present a greater degree of physical challenge than other equipment on public playgrounds.

Older children tend to use climbing equipment more frequently and proficiently than younger ones. Because very young children have not yet developed some of the physical skills necessary for certain climbing activities (including balance, coordination, and upper body strength), they may have difficulty using more challenging climbing components such as rung ladders, non-rigid climbers, arch climbers, and upper body devices.

12.1.2 Design Considerations

Since the more challenging modes of access discussed in Section 10 are also intended to be used as climbing

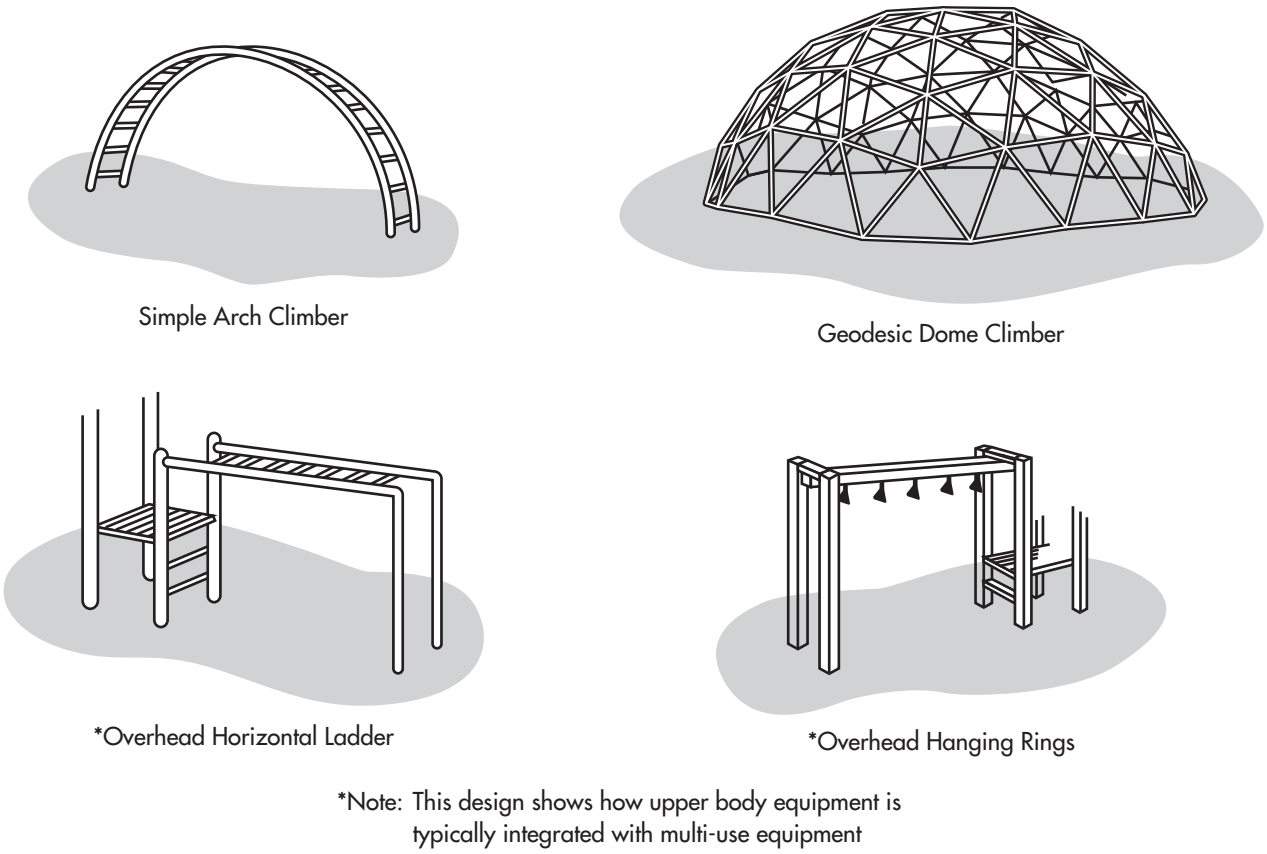

Figure 14. Typical Climbing Equipment

devices, the recommendations for the size of hand-gripping components and stepped platforms covered in that section are applicable to climbing equipment.

Climbers should not have climbing bars or other structural components in the interior of the structure onto which a child may fall from a height of greater than 18 inches.

Climbing equipment should allow children to descend as easily as they ascend. One way of implementing this recommendation is to provide an easier, alternate means of descent, such as another mode of egress, platform, or piece of equipment. For example, a stairway can be added to provide a less challenging mode of descent than a vertical rung ladder or flexible climbing device. The levels of challenge that characterize different types of access are discussed in Section 10.

Preschool-Age Children: Offering an easy way out is particularly important on climbing devices intended for preschoolers, since their ability to descend climbing components emerges later than their ability to climb up the same components.

12.1.3 Climbers With Non-Rigid Components

Net and chain climbers use a flexible grid of ropes or chains for climbing. Tire climbers are also described as flexible climbers. These may have the tires secured tread-to-tread in the form of a sloping grid or the tires may be suspended individually by chains or other means to provide access to an elevated platform. Since net, chain, and tire climbers have flexible components that do not provide a steady means of support, they require more advanced balance abilities than conventional ladders.

Flexible grid climbing devices which provide access to platforms should be securely anchored at both ends. When one end is connected to the ground, the anchoring devices should be installed below ground level, beneath the base of the protective surfacing material.

Connections between ropes, cables, or chains within the climbing grid or between tires should be securely fixed. Spacing between the horizontal and vertical components of a climbing grid should satisfy all entrapment criteria (see Section 9.6).

Flexible grid climbing devices are not recommended as the sole means of access to equipment intended for preschool-age children.

12.1.4 Arch Climbers

Arch climbers consist of metal or wood rungs attached to convex side supports. They may be free standing (see Figure 14) or be provided as a more challenging means of access to other equipment (see Figure 12). Because of this extra challenge, they should not be used as the sole means of access to other equipment. A less challenging option will ensure that children use the arch climber because they are willing to assume the challenge and not because they are forced to use it. Free standing arch climbers are not recommended for preschool-age children.

The rung diameter and spacing of rungs on arch climbers should follow the recommendations for rung ladders in Table 2.

12.1.5 Horizontal Ladders and Overhead Rings

Four-year-olds are generally the youngest children capable of using upper body devices such as these. The recommendations below are designed to accommodate children 4 through 12 years of age.

The space between adjacent rungs of overhead ladders should be greater than 9 inches to satisfy the entrapment recommendations (see Section 9.6). The center-to-center spacing of horizontal ladder rungs should be as follows:

- Preschool-Age Children: no more than 12 inches.
- School-Age Children: no more than 15 inches.

This recommendation does not apply to the spacing of overhead rings because, during use, the gripped ring swings through an arc and reduces the distance to the gripping surface of the next ring.

Horizontal ladders intended for preschool-age children should have rungs that are parallel to one another and evenly spaced.

The first handhold on either end of upper body equipment should not be placed directly above the platform or climbing rung used for mount or dismount. This

minimizes the risk of children impacting rigid access structures if they fall from the first handhold during mount or dismount.

The maximum height of upper body equipment measured from the center of the grasping device to the protective surfacing should be:

- Preschool-Age Children: 60 inches.
- School-Age Children: 84 inches.

If overhead swinging rings are suspended by chains, the maximum length of the chains should be 12 inches.

12.1.6 Sliding Poles

Vertical sliding poles are designed to be more challenging than some other types of climbing equipment. They are not recommended for preschool-age children who may lack the upper body strength and coordination to successfully slide down the pole. Furthermore, once younger children have grasped the pole, they would be forced to slide down it since there is no alternative option.

Sliding poles should be continuous with no protruding welds or seams along the sliding surface and the pole should not change direction along the sliding portion.

The horizontal distance between a sliding pole and the edge of the platform or other structure used for access to the sliding pole should be at least 18 inches. This minimum distance applies to all points down the sliding pole.

No point on the sliding pole at or above the level of the access structure, where a child is likely to reach for the pole, should be more than 20 inches away from the edge of the access structure.

The pole should extend at least 60 inches above the level of the platform or other structure used for access to the sliding pole.

The diameter of sliding poles should be no greater than 1.9 inches.

Sliding poles and their access structures should be located so that traffic from other events will not interfere with the users during descent.

12.1.7 Climbing Ropes

A climbing rope should be secured at both ends and not be capable of being looped back on itself creating a loop with an inside perimeter greater than 5 inches.

12.1.8 Balance Beams

To avoid injuries during falls, balance beams should be no higher than:

- Preschool-Age Children: 12 inches.
- School-Age Children: 16 inches.

12.1.9 Layout of Climbing Components

When climbing components are part of a composite structure, their level of challenge and mode of use should be compatible with the traffic flow from adjacent components.

Upper body devices should be placed so that the swinging movement generated by children on this equipment cannot interfere with the movement of children on adjacent structures, particularly other children descending on slides.

The design of adjacent play structures should not facilitate climbing to the top support bars of upper body equipment.

12.2 Merry-Go-Rounds

Merry-go-rounds are the most common type of rotating equipment found on public playgrounds. Children usually sit or stand on the platform while other children or adults push the merry-go-round to make it rotate. In addition, children often get on and off the merry-go-round while it is in motion.

Merry-go-rounds may present a physical hazard to preschool-age children who have little or no control over such products once they are in motion. Therefore, children in this age group should always be supervised when using merry-go-rounds. Following are recommendations for merry-go-rounds:

The rotating platform should be continuous and approximately circular. The difference between the minimum and maximum radii of a non-circular platform should not

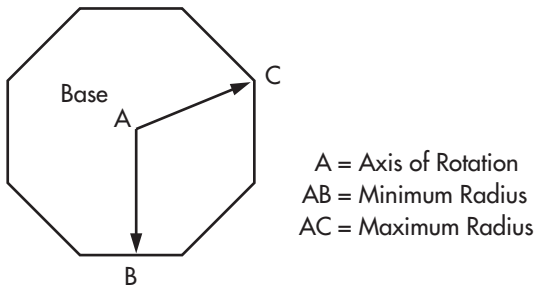

The difference between dimensions AC and AB should not exceed 2.0 inches.

Figure 15. Minimum and Maximum Radii of Non-Circular Merry-Go-Round Platform

exceed 2.0 inches (see Figure 15). No components of the apparatus, including handgrips, should extend beyond the perimeter of the platform. The underside of the perimeter of the platform should be no less than 9 inches above the level of the protective surfacing.

Children should be provided with a secure means of holding on. Where handgrips are provided, they should conform to the general recommendations for hand-gripping components in Section 10.2.1.

There should not be any accessible shearing or crushing mechanisms in the undercarriage of the equipment. The rotating platform of a merry-go-round should not have any sharp edges. The surface of the platform should be continuous with no openings between the axis and the periphery that permit a rod having a diameter of 5/16 inch to penetrate completely through the surface.

A means should be provided to limit the peripheral speed of rotation to a maximum of 13 ft/sec.

Merry-go-round platforms should not be provided with an oscillatory (up and down) motion.

12.3 Seesaws

The typical seesaw (also known as a "teeter totter") consists of a board or pole supported at the center by a fulcrum and having a seat at each end (see Figure 16). Seesaw use is quite complex because it requires two children to cooperate and combine their actions.

Younger children do not generally have the skills required to effectively use fulcrum seesaws. Therefore, seesaws are not recommended for preschool-age children unless they are equipped with a spring centering device to prevent abrupt contact with the ground should one child elect to dismount.

There is a trend to replace fulcrum seesaws on public playgrounds with spring-centered seesaws which have the advantage of not requiring two children to coordinate their actions in order to play safely (see discussion of Spring Rocking Equipment in Section 12.5).

The fulcrum of fulcrum seesaws should not present a pinch or crush hazard.

Partial car tires, or some other shock-absorbing material, should be embedded in the ground underneath the seats of fulcrum seesaws, or secured on the underside of the seats. This will help prevent limbs from being crushed between the seat and the ground, as well as cushion the impact. Fulcrum see-saws may also be equipped with a spring centering mechanism to minimize the risk of injury due to impact with the ground.

Handholds should be provided at each seating position for gripping with both hands and should not turn when grasped. Handholds should not protrude beyond the sides of the seat. Footrests should not be provided on fulcrum see-saws unless they are equipped with a spring centering mechanism to minimize the likelihood of impact with the ground.

Fulcrum seesaws should be constructed so that the maximum attainable angle between a line connecting the seats and the horizontal is 25°.

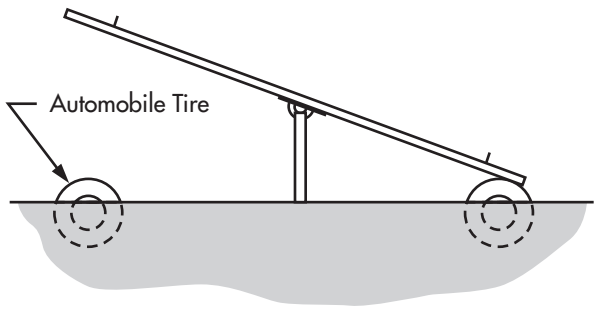

Figure 16. Typical Fulcrum Seesaw

12.4 Slides

12.4.1 General

Although children under 6 years of age may be more likely to play on slides, older children will still use slides depending on their availability relative to other types of equipment. Children can be expected to descend slide chutes in many different positions, rather than always sitting and facing forward as they slide. They will slide down facing backward, on their knees, lying on their backs, head first, and will walk both up and down the chute. Younger children in particular often slide down on their stomachs, either head or feet first.

Slides may provide a straight, wavy, or spiral descent either by means of a tube or an open slide chute. They may be either free-standing (see Figure 17), part of a composite structure, or built on the grade of a natural or man-made slope (embankment slide). The recommendations in this section do not apply to water slides or swimming pool slides.

12.4.2 Slide Access

With the exception of embankment slides, access to a slide may be by means of a ladder with rungs or steps, a stairway with steps, or the slide may be a component of a composite play structure to which access is provided by other means. Whatever means of access is provided to a slide, it should conform to the guidelines specified in the general discussion of access to all playground equipment (see Section 10).

12.4.3 Slide Platform

All slides should be provided with a platform with sufficient length to facilitate the transition from standing to sitting at the top of the inclined sliding surface. The length of the platform will usually not be an issue when the slide is attached to the deck of a composite structure, because decks are generally at least 3 feet square. However, in the case of a free-standing slide, it is recommended that the platform have a minimum length of at least 22 inches.

The platform should be horizontal and have a width at least equal to the width of the slide.

Guardrails or protective barriers should surround a slide platform and should conform to the guidelines specified in the general discussion of platforms (see Section 11).

Slides should not have any spaces or gaps between the platform and the start of the slide chute.

With the exception of tube slides, handholds should be provided at the entrance to all slides to facilitate the

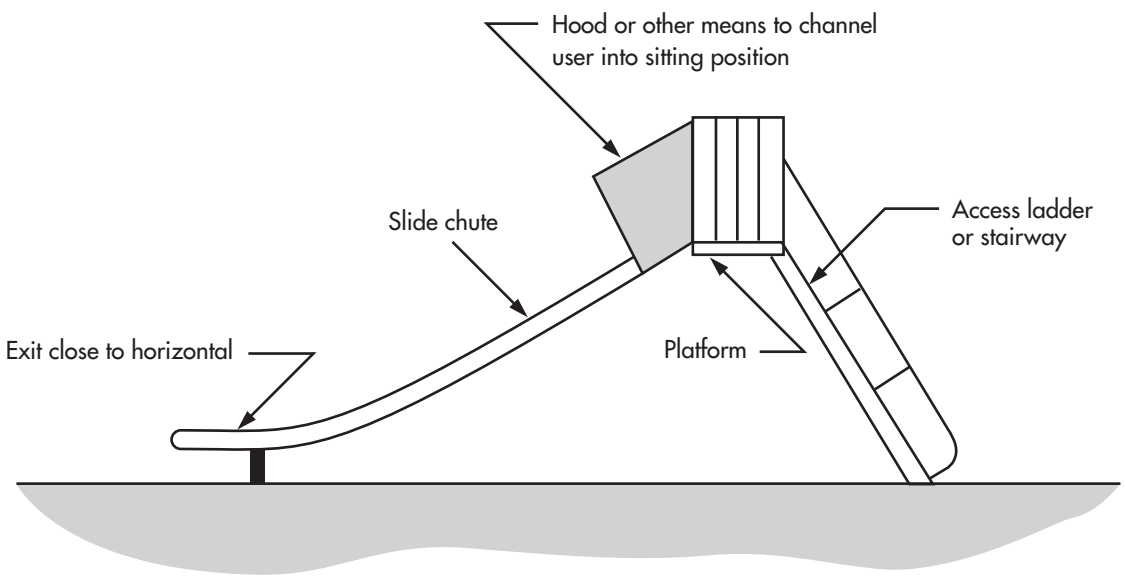

Figure 17. Typical Free-Standing Straight Slide

transition from standing to sitting and decrease the risk of falls. These should extend high enough to provide hand support for the largest child in a standing position, and low enough to provide hand support for the smallest child in a sitting position.

At the entrance to the chute there should be a means to channel a user into a sitting position. This may be a guardrail, a hood, or other device. Whatever means is provided, it should be of a design that does not encourage climbing.

12.4.4 Sliding Section of Straight Slides

It is recommended that the average incline of a slide chute be no more than 30 degrees. This can be measured by determining that the height to length ratio (as shown in Figure 18) does not exceed 0.577. No span on the slide chute should have a slope greater than 50 degrees.

Straight slides with flat open chutes should have sides with a 4 inch minimum height extending along both sides of the chute for the entire length of the inclined sliding surface.

The sides should be an integral part of the chute, without any gaps between the sides and the sliding surface. [Note: Roller slides are excluded from this recommendation.]

Slides may have an open chute with a circular, semicircular or curved cross section provided that:

a. the vertical height of the sides is no less than 4 inches when measured at right angles to a horizontal line that is 12 inches long when the slide is intended for preschool-age children and 16 inches long when the slide is intended for school-age children (see Figure 19);

or

b. the vertical height of the sides is no less than 4 inches minus two times the width of the slide chute divided by the radius of the slide chute curvature (see Figure 20).

Metal slides should be placed in shaded areas to prevent burns caused by direct sun on the slide chute.

12.4.5 Exit region

All slides should have an exit region to help children maintain their balance and facilitate a smooth transition from sitting to standing when exiting.

The exit region should be essentially horizontal and parallel to the ground and have a minimum length of 11 inches.

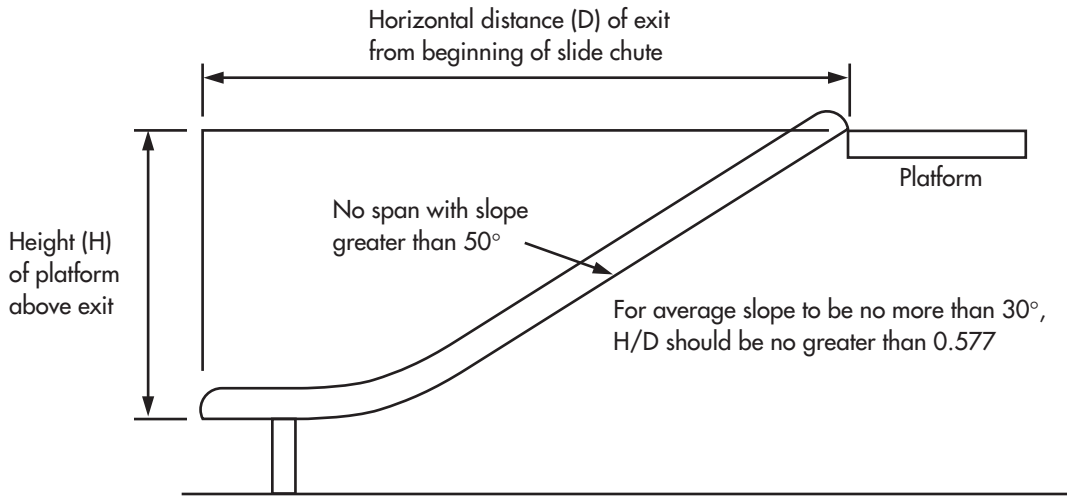

Figure 18. Slide Slope

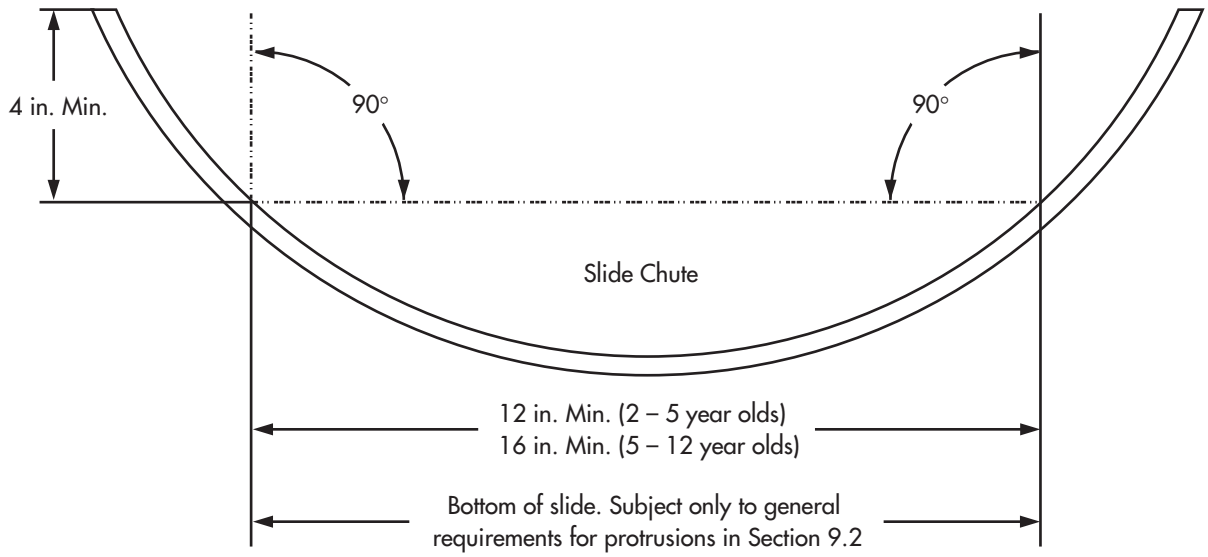

Figure 19. Minimum Side Height for Slide with Circular Cross Section

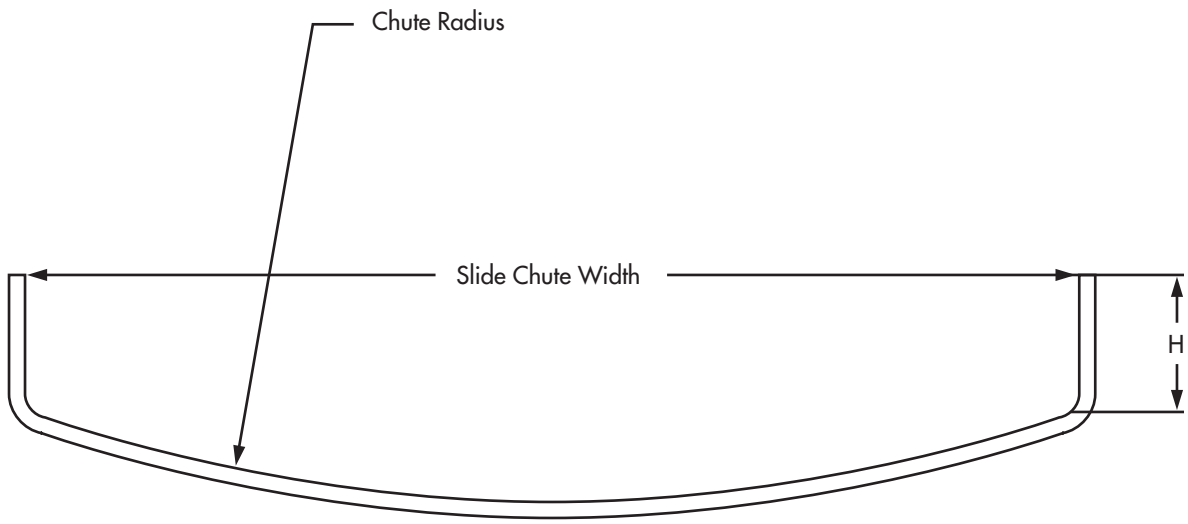

$$H = 4 - \frac{2 \times \text{Slide Chute Width}}{\text{Slide Chute Radius}}$$

Figure 20. Formula for Minimum Vertical Side Height for Slide with Curved Chute

For slides that are no more than 4 feet in height, the height of the exit region should be no more than 11 inches from the protective surfacing.

For slides that are over 4 feet in height, the exit region should be at least 7 inches but not more than 15 inches above the protective surfacing.

Slide exit edges should be rounded or curved, to prevent lacerations or other injuries which could result from impact with a sharp or straight edge.

All slide exits should be located in uncongested areas of the playground.

12.4.6 Embankment Slides

The slide chute of an embankment slide should have a maximum height of 12 inches above the underlying ground surface. Such a design basically eliminates the hazard of falls from height. Embankment slides should follow all of the recommendations given for straight slides, where applicable, e.g., side height, slope, use zone at exit, etc. It is important that some means be provided at the slide chute entrance to minimize the use of these slides by children on skates, skateboards or bicycles.

12.4.7 Spiral Slides

It is recommended that spiral slides follow the recommendations for straight slides (where applicable), with special attention given to design features which may present problems unique to spiral slides, such as lateral discharge of the user.

Preschool-Age Children: Because these children have less ability to maintain balance and postural control, only short spiral slides, one turn (360°) or less, are recommended for this age group.

12.4.8 Tube Slides

Tube slides should meet all the applicable recommendations for other slides.

Barriers should be provided or surfaces textured to prevent sliding on the top (outside) of the tube.

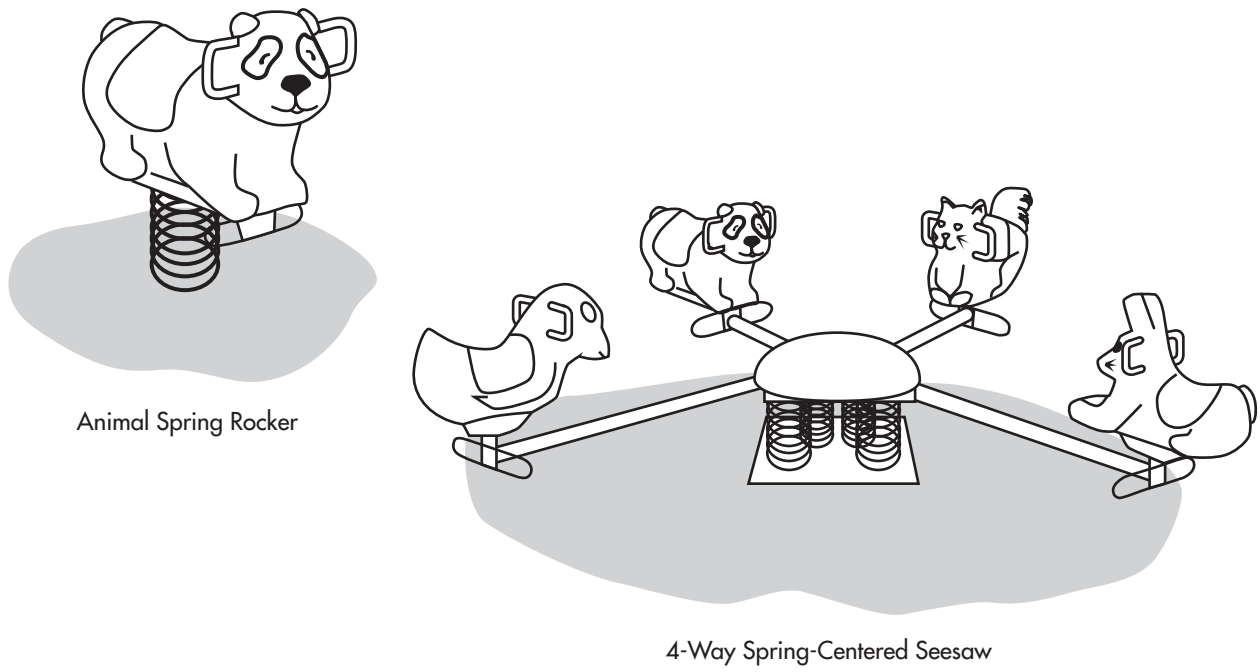

Figure 21. Examples of Spring Rockers

The minimum internal diameter of the tube should be no less than 23 inches.

It should be noted that children using tube slides may not be visible to a supervisor. Consideration should be given to extra supervision on playgrounds having tube slides or to having transparent tube sections for observation and supervision.

12.4.9 Roller Slides

Roller slides should meet applicable recommendations for slides in Section 12.4.

The space between adjacent rollers and between the ends of the rollers and the stationary structure should be less than 3/16 inch.

Frequent inspections are recommended to insure that there are no missing rollers or broken bearings.

12.5 Spring Rockers

Preschool-age children enjoy the bouncing and rocking activities presented by this equipment, but older children may not find it challenging enough.

Examples of spring rockers are shown in Figure 21. Preschoolers are the primary users of such rocking equipment. Therefore, the recommendations in this section address only preschool-age children.

Seat design should not allow the rocker to be used by more than the intended number of users.

Each seating position should be equipped with handgrips and footrests. The diameter of handgrips should follow the recommendations for handgripping components in Section 10.

The springs of rocking equipment should minimize the possibility of children pinching their hands or their feet between coils or between the spring and a part of the rocker.

12.6 Swings

12.6.1 General

Children of all ages generally enjoy the sensations created while swinging. Most often, they sit on the swings, and it is common to see children jumping off swings. Younger children tend to also swing on their stomachs, and older children may stand on the seats.

Swings may be divided into two distinct types: single-axis of motion and multiple-axes of motion. A single-axis swing is intended to swing back-and-forth in a single

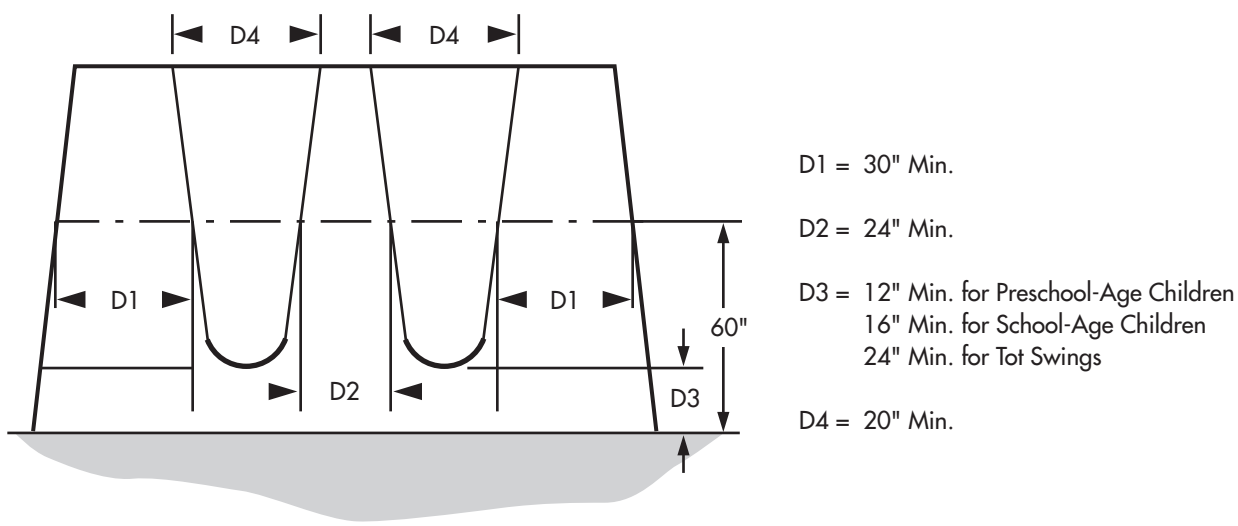

Figure 22. Minimum Clearances for Single-Axis Swings

plane and generally consists of a seat supported by at least two suspending members each of which is connected to a separate pivot on an overhead structure. A multiple-axis swing consists of a seat (generally a tire) suspended from a single pivot that permits it to swing in any direction. Hardware used to secure the suspending elements to the swing seat and to the supporting structure should not be removable without the use of tools. S-hooks are often part of a swing's suspension system, either attaching the suspending elements to the overhead support bar or to the swing seat. Open S-hooks can catch a child's clothing and present a strangulation hazard. S-hooks should be pinched closed. An S-hook is considered closed if there is no gap or space greater than 0.04 inches. It is appropriate to measure this gap with a feeler gauge but, in the absence of such a gauge, the gap should not admit a dime.

Swings should be suspended from support structures that discourage climbing. A-frame support structures should not have horizontal cross-bars.

Fiber ropes are not recommended as a means to suspend swings.

12.6.2 Single-Axis (To-Fro) Swings

To help prevent young children from inadvertently running into the path of moving swings, swing structures should be located away from other equipment or activities. Additional protection can be provided by means of a low barrier, such as a fence or hedge. Such barriers should not be an obstacle within the use zone of a swing structure or hamper supervision by blocking visibility.

The use zone to the front and rear of single-axis swings should never overlap the use zone of another piece of equipment.

To minimize the likelihood of children being struck by a moving swing, it is recommended that no more than two single-axis swings be hung in each bay of the supporting structure.

Attaching single-axis swings to composite structures is not recommended.

Swing seats should be designed to accommodate no more than one user at any time. To help reduce the severity of impact injuries, wood or metal swing seats are not recommended. Lightweight rubber or plastic swing seats are preferred. Edges of seats should have smoothly finished or rounded edges and should conform to the protrusion recommendations in Section 9.3.

The vertical distance from the underside of an occupied swing seat to the protective surfacing should be no less than 12 inches for swings intended for preschool-age children and no less than 16 inches for swings intended for school-age children. NOTE: If loose-fill material is used as a protective surfacing, the seat height recommendations should be determined after the material has been leveled.

To minimize collisions between swings or between a swing and the supporting structure, the clearances shown in Figure 22 are recommended. In addition, to reduce side-to-side motion, swing hangers should be spaced no less than 20 inches apart.

It is recommended that single-axis swings intended for preschool-age children have the pivot points no greater than 8 feet above the protective surfacing.

12.6.3 Tot Swings

These are single-axis swings intended for children under 4 years of age to use with adult assistance. The seats and suspension systems of these swings, including the related hardware, should follow all of the other criteria for conventional single axis swings.

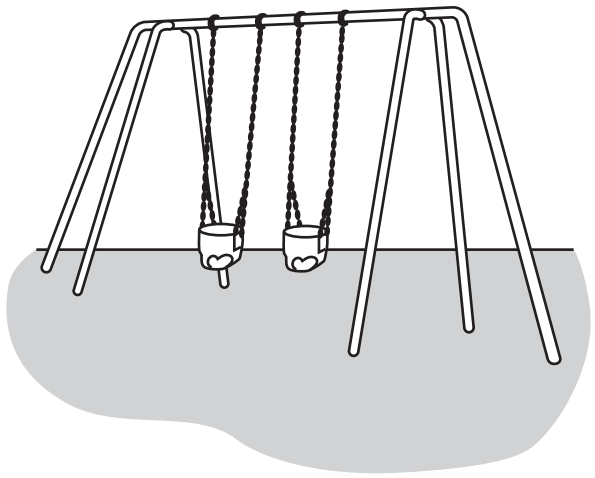

Figure 23. Example of Tot Swings

Full-bucket tot swing seats are recommended to provide support on all sides of a child (see Figure 23). It is important that such supports do not present a strangulation hazard. Openings in tot swing seats should conform to the entrapment criteria in Section 9.6. It is recommended that tot swings be suspended from structures which are separate from those for other swings, or at least suspended from a separate bay of the same structure.

The vertical distance from the underside of an occupied tot swing seat to the protective surfacing should be no less than 24 inches to minimize the likelihood that it will be used by unsupervised young children who may become stuck in the seat.

12.6.4 Multi-Axis Tire Swings

Tire swings are usually suspended in a horizontal orientation using three suspension chains or cables connected to a single swivel mechanism that permits both rotation and a swinging motion in any axis.

A multi-axis tire swing should not be suspended from a structure having other swings in the same bay. Attaching multi-axis swings to composite structures is not recommended.

To minimize the hazard of impact, heavy truck tires should be avoided. Further, if steel-belted radials are used, they should be closely examined to ensure that there are no exposed steel belts that could be a potential protrusion or laceration hazard. Plastic materials can be used as an alternative to simulate actual automobile tires. Drainage holes should be provided in the underside of the tire.

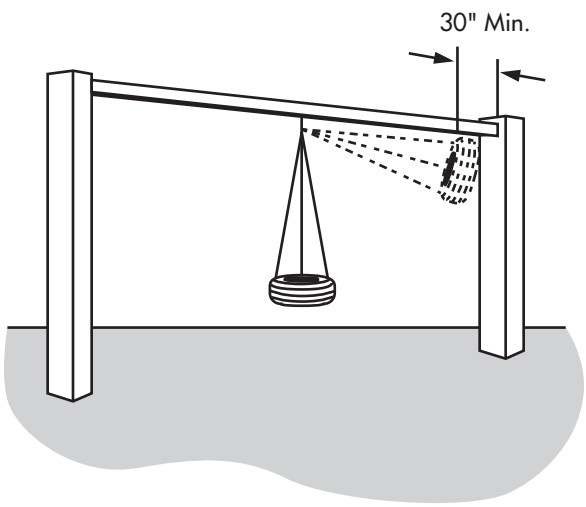

Figure 24. Multi-Axis Tire Swing Clearance

The likelihood of hanger mechanism failure is increased for tire swings, due to the added stress of rotational movement and multiple occupancy. Special attention to maintenance is warranted. The hanger mechanisms for multi-axis tire swings should not have any accessible pinch points.

The minimum clearance between the seating surface of a tire swing and the uprights of the supporting structure should be 30 inches when the tire is in a position closest to the support structure (see Figure 24).

12.6.5 Swings Not Recommended for Public Playgrounds

The following types of swings are not recommended for use in public playgrounds:

Animal Figure Swings – These are not recommended because their rigid metal framework is heavy presenting a risk of impact injury.

Multiple Occupancy Swings – With the exception of tire swings, swings that are intended for more than one user are not recommended because their greater mass, as compared to single occupancy swings, presents a risk of impact injury.

Rope Swings – Free swinging ropes that may fray or otherwise form a loop are not recommended because they present a potential strangulation hazard.

Swinging Dual Exercise Rings and Trapeze Bars – These are rings and trapeze bars on long chains that are generally considered to be items of athletic equipment and are not recommended for public playgrounds. NOTE: The recommendation against the use of exercise rings does not apply to overhead hanging rings such as those used in a ring trek or ring ladder (see Figure 14).

12.7 Trampolines

Trampolines are not recommended for use on public playgrounds.

REFERENCES

1. Ratte, Donna J., Morrison, Melanie L., Lerner, Neil D., *Development of Human Factors Criteria for Playground Equipment Safety*; COMSIS Corporation, March 1990.

2. *Standard Consumer Safety Performance Specification for Playground Equipment for Public Use*, ASTM F1487; ASTM, 100 Barr Harbor Drive, West Conshohocken, PA 19428-2959.

3. *Standard Consumer Safety Performance Specification for Home Playground Equipment*, ASTM F1148; ASTM, 100 Barr Harbor Drive, West Conshohocken, PA 19428-2959.

4. Tinsworth, Deborah Kale, Kramer, John T., *Playground Equipment-Related Injuries and Deaths*; U.S. Consumer Product Safety Commission, Washington D.C. 20207, April 1990.

5. Collantes, Margarita, *Evaluation of the Importance of Using Head Injury Criterion* (HIC) *to Estimate the Likelihood of Head Impact Injury as a Result of a Fall Onto Playground Surface Materials*; U.S. Consumer Product Safety Commission, Washington, D.C. 20207, October 1990.

6. *Standard Specification for Impact Attenuation of Surface Systems Under and Around Playground Equipment*, ASTM F1292; ASTM, 100 Barr Harbor Drive, West Conshohocken, PA 19428-2959.

7. Title 16, Code of Federal Regulations, Part 1303; *Ban of Lead-Containing Paint and Certain Consumer Products Bearing Lead-Containing Paint*; Superintendent of Documents, U.S. Government Printing Office, Washington, D.C. 20402.

8. CPSC *Staff Recommendations for Identifying and Controlling Lead Paint on Public Playground Equipment*; U.S. Consumer Product Safety Commission, Washington, D.C., 20207, October 1996. Copies also available by calling 1-800-638-CPSC or visiting the CPSC's Internet Web site at http://www.cpsc.gov (go to "What's Happening").

9. Lee, Brian C., *Estimate of Risk of Skin Cancer from Dislodgeable Arsenic on Pressure Treated Wood Playground Equipment*; U.S. Consumer Product Safety Commission, Washington, D.C. 20207, January 1990.

10. *Consumer Information Sheet: Inorganic Arsenical Pressure-Treated Wood*; American Wood Preservers Institute, 1945 Gallows Road, Suite 550, Vienna, Virginia 22182.7.

11. U.S. Architectural and Transportation Barriers Compliance Board, 1331 F Street, NW, Washington, DC 20001-1111.

12. *Entrapment Probes and Protrusion Gauges Kit*; Safety Products Dept., National Recreation and Park Association, 22377 Belmont Ridge Road, Ashburn, VA 20148-4501.

APPENDIX A
Suggested General Maintenance Checklist

The following checklist may be used to determine the condition of a playground. Numbers in parenthesis refer to sections in the handbook that discuss these issues. Place a check mark next to each of the following items that apply.

Surfacing (4)

____ The equipment has adequate protective surfacing under and around it and the surfacing materials have not deteriorated.

____ Loose-fill surfacing materials have no foreign objects or debris.

____ Loose-fill surfacing materials are not compacted and do not have reduced depth in heavy use areas such as under swings or at slide exits.

General Hazards

____ There are no sharp points, corners or edges on the equipment (9.1).

____ There are no missing or damaged protective caps or plugs (9.1).

____ There are no hazardous protrusions and projections (9.2).

____ There are no potential clothing entanglement hazards, such as open S-hooks or protruding bolts (8.2, and 9.4).

____ There are no pinch, crush, and shearing points or exposed moving parts (9.5).

____ There are no trip hazards, such as exposed footings on anchoring devices and rocks, roots, or any other environmental obstacles in the play area (9.7).

Deterioration of the Equipment (7.2)

____ The equipment has no rust, rot, cracks or splinters, especially where it comes in contact with the ground.

____ There are no broken or missing components on the equipment (e.g., handrails, guardrails, protective barriers, steps or rungs on ladders) and there are no damaged fences, benches, or signs on the playground.

____ All equipment is securely anchored.

Security of Hardware (7.2)

____ There are no loose fastening devices or worn connections, such as S-hooks.

____ Moving components, such as swing hangers or merry-go-round bearings, are not worn.

Drainage (6.1)

____ The entire play area has satisfactory drainage, especially in heavy use areas such as under swings and at slide exits.

Leaded Paint (8.1)

____ The leaded paint used on the playground equipment has not deteriorated as noted by peeling, cracking, chipping or chalking.

____ There are no ares of visible leaded paint chips or accumulation of lead dust.

General Upkeep of Playgrounds (7.2)

____ The entire playground is free from miscellaneous debris or litter such as tree branches, soda cans, bottles, glass, etc.

____ There are no missing trash receptacles.

____ Trash receptacles are not full.

NOTES:

APPENDIX B
Entrapment Recommendations and Test Methods

B1. GENERAL — Any completely-bounded opening (see Figure B-1) may be a potential head entrapment hazard and should conform to the recommendations in this appendix. One exception to these recommendations is an opening where the ground serves as the lower boundary. Openings in both horizontal and vertical planes present a risk of entrapment. Even those openings which are low enough to permit a child's feet to touch the ground present a risk of strangulation to an entrapped child, because younger children may not have the necessary cognitive ability and motor skills to withdraw their heads, especially if scared or panicked.

An opening may present an entrapment hazard if the distance between any interior opposing surfaces is greater than 3.5 inches or less than 9 inches; when one dimension of an opening is within this potentially hazardous range, all dimensions of the opening should be considered together to fully evaluate the possibility of entrapment. The most appropriate method to determine whether an opening is hazardous is to test it using the following fixtures, methods, and performance criteria.

These recommendations apply to all playground equipment, both for preschool-age and school-age children; fixed equipment as well as moving equipment (in its stationary position) should be tested for entrapment hazards. There are two special cases for which separate procedures are given: completely-bounded openings where depth of penetration is a critical issue (see Figure B-2); and openings formed by non-rigid climbing components.

B2. TEST FIXTURES — Two templates are required to determine if completely bounded openings in rigid structures present an entrapment hazard.

B2.1 Small Torso Template — The dimensions (see Figure B-3) of this template are based on the size of the torso of the smallest user at risk, (5th percentile 2-year-old child). If an opening is too small to admit the template, it is also too small to permit feet first entry by a child. Because children's heads are larger than their torsos, an opening that does not admit the small torso probe will also prevent head first entry into an opening by a child.

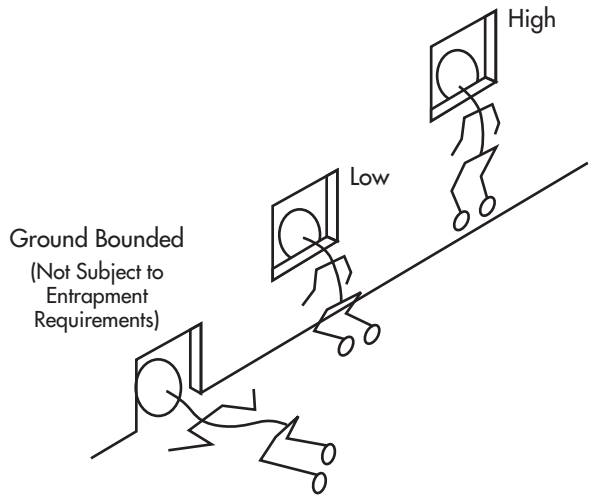

Figure B-1. Examples of Completely Bounded Openings

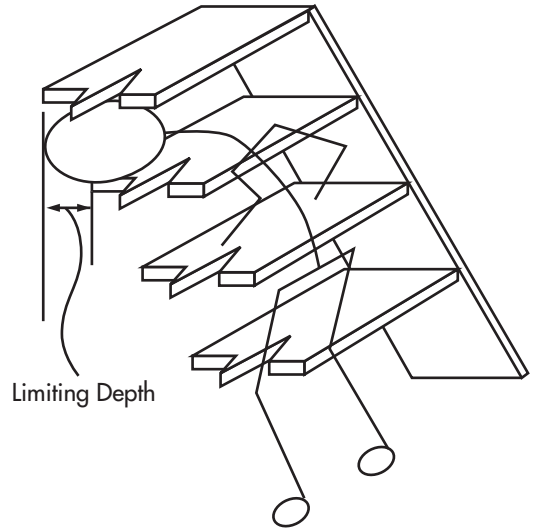

Figure B-2. Completely Bounded Openings with Limited Depth

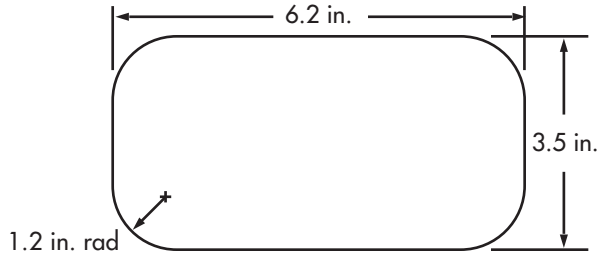

Figure B-3. Small Torso Template

B2.2 Large Head Template — The dimensions (see Figure B-4) of this template are based on the largest dimension on the head of the largest child at risk (95th percentile 5-year-old child). If an opening is large enough to permit free passage of the template, it is large enough to permit free passage of the head of the largest child at risk in any orientation. In addition, openings large enough to permit free passage of the Large Head Template also will not entrap the chest of the largest child at risk.

These templates can easily be fabricated from cardboard, plywood or sheet metal.

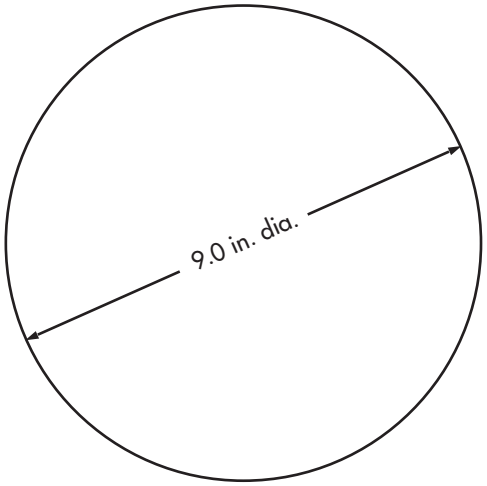

Figure B-4. Large Head Template

B3. RECOMMENDATION — When tested in accordance with the procedure in B4. below, an opening meets the recommendation if:

(1) the opening does not admit the Small Torso Template,

or

(2) the opening admits the Small Torso Template and also admits the Large Head Template.

An opening fails to meet the recommendation if it admits the Small Torso Template but does not admit the Large Head Template.

B4. TEST PROCEDURE — Attempt to place the Small Torso Template in the opening with the plane of the template parallel to the plane of the opening. While keeping it parallel to the plane of the opening, the template should be rotated to its most adverse orientation i.e., major axis of template oriented parallel to the major axis of the opening. If the Small Torso Template can be freely inserted through the opening, place the Large Head Template in the opening, again with the plane of the template parallel to the plane of the opening, and attempt to freely insert it through the opening. The test procedure is illustrated in Figure B-5.

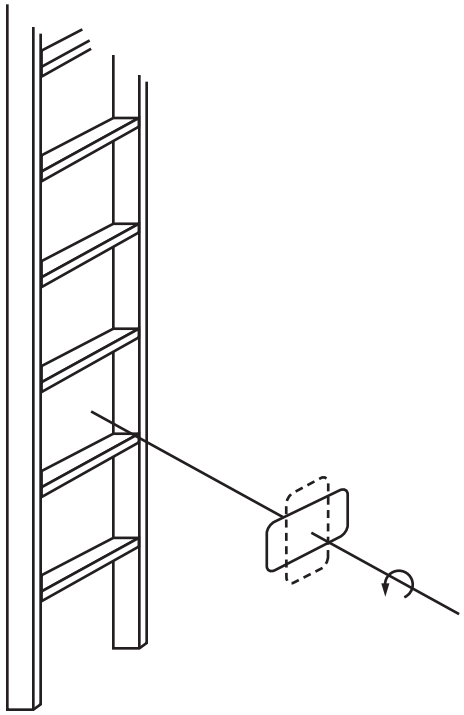

Test procedures and performance criteria for completely-bounded openings.

Place the Small Torso Template in the opening with the plane of the template parallel to the plane of the opening. Rotate the template while keeping it parallel to the opening.

If the Small Torso Template can be inserted into the opening, place the Large Head Template into the opening so its plane is parallel to the plane of the opening.

An opening can pass this test when tested in accordance with the above procedures in one of two ways: 1) the opening does not admit the Small Torso Template when it is rotated to any orientation about its own axis, or 2) the opening admits the Small Torso Template and also admits the Large Head Template. An opening fails the test under the following conditions: the opening admits the Small Torso Template but does not admit the Large Head Template.

Figure B-5. Entrapment Test for Completely-Bounded Openings

B5. COMPLETELY-BOUNDED OPENINGS WHERE DEPTH OF PENETRATION IS A CRITICAL ISSUE — The configuration of some openings may be such that the depth of penetration is a critical issue for determining the entrapment potential. This is a special case for which separate test procedures are necessary.

For example, consider a vertical wall or some other barrier behind a stepladder. The entrapment potential depends not only on the dimensions of the opening between adjacent steps but also on the horizontal space between the lower boundary of the opening and the barrier. A child may enter the opening between adjacent steps feet first and may proceed to pass through the space between the rear of the lower step and the barrier and become entrapped when the child's head is unable to pass through either of these two openings. In effect, there are openings in two different planes each of which has the potential for head entrapment and should, therefore, be tested.

Figure B-6 illustrates these two planes for a stepladder as well as for a generic opening. Plane A is the plane of the completely bounded opening in question and Plane B is the plane of the opening encompassing the horizontal space between the lower boundary of the opening in Plane A and the barrier that should also be tested against the entrapment recommendations.

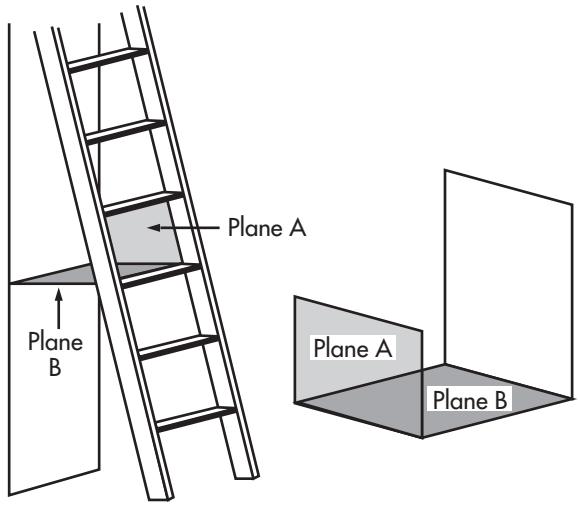

Figure B-6. Examples of Completely-Bounded Openings Where Depth of Penetration is a Critical Issue

The procedures and performance criteria for testing openings where the depth of penetration is a critical issue depend on a series of questions, as described below.

The first step is to determine whether or not the smallest user at risk can enter the opening in Plane A. The Small Torso Template is used to test this opening as follows:

Place the Small Torso Template in the opening in Plane A with its plane parallel to Plane A; rotate the template to its most adverse orientation with respect to the opening while keeping it parallel to Plane A. Does the opening in Plane A admit the Small Torso Template in any orientation when rotated about its own axis?

NO — If the opening in Plane A does not admit the Small Torso Template in any orientation, then the opening is small enough to prevent either head first or feet first entry by the smallest user at risk and is not an entrapment hazard. The opening meets the recommendations.

YES — If the opening in Plane A admits the Small Torso Template, then the smallest user at risk can enter the opening in Plane A. The entrapment potential depends on whether or not the smallest user at risk can also enter the opening in Plane B. The Small Torso Template is again used to test this opening as follows: With the plane of the Small Torso Template parallel to the opening in Plane B and with the template's major axis (i.e., the 6.2-inch dimension) parallel to Plane A, does the opening in Plane B admit the Small Torso Template?

NO — If the opening in Plane B does not admit the Small Torso Template, then it is small enough to prevent head or feet first entry by the smallest user at risk. Therefore the depth of penetration into the opening in plane A is insufficient to result in entrapment of the smallest user at risk. The opening meets the recommendations.

YES — If the opening in Plane B admits the Small Torso Template, then the smallest user at risk can enter the opening in Plane B feet first. The entrapment potential depends on whether or not the Large Head Template can exit the opening in Plane A when tested as follows:

Place the Large Head Template in the opening in Plane A with its plane parallel to Plane A. Does the opening in Plane A admit the Large Head Template?

NO — If the opening in Plane A does not admit the Large Head Template, then a child whose torso can enter the opening in Plane A as well as the opening in Plane B, may become entrapped by the head in the opening in Plane A. The opening does not meet the recommendations.

YES — If the opening in Plane A admits the Large Head Template, then the largest user at risk can exit the opening in Plane A. The entrapment potential depends on whether or not the largest user at risk can also exit the opening in Plane B. The Large Head Template is used to test this as follows:

With the plane of the Large Head Template parallel to the opening in Plane B, does the opening in Plane B admit the Large Head Template?

NO — If the opening in Plane B does not admit the Large Head Template, then the largest user at risk cannot exit the opening in Plane B. This presents an entrapment hazard because a child's torso may enter the openings in Plane A and Plane B, and a child's head may pass through the opening in Plane A but become entrapped in the opening in Plane B. The opening does not meet the recommendations.

YES — If the opening in Plane B admits the Large Head Template, then the largest user at risk can exit the opening in Plane B so there is no entrapment hazard. The openings in Plane A and Plane B meet the recommendations.

B6. Non-Rigid Openings — Climbing components such as flexible nets are also a special case for the entrapment tests because the size and shape of openings on this equipment can be altered when force is applied, either intentionally or simply when a child climbs on or falls through the openings. Children are then potentially at risk of entrapment in these distorted openings.

B6.1 Test Fixtures — The procedure for determining conformance to the entrapment recommendations for non-rigid openings requires two three-dimensional test probes which are illustrated in Figures B-7 and B-8 and are applied to an opening in a non-rigid component with

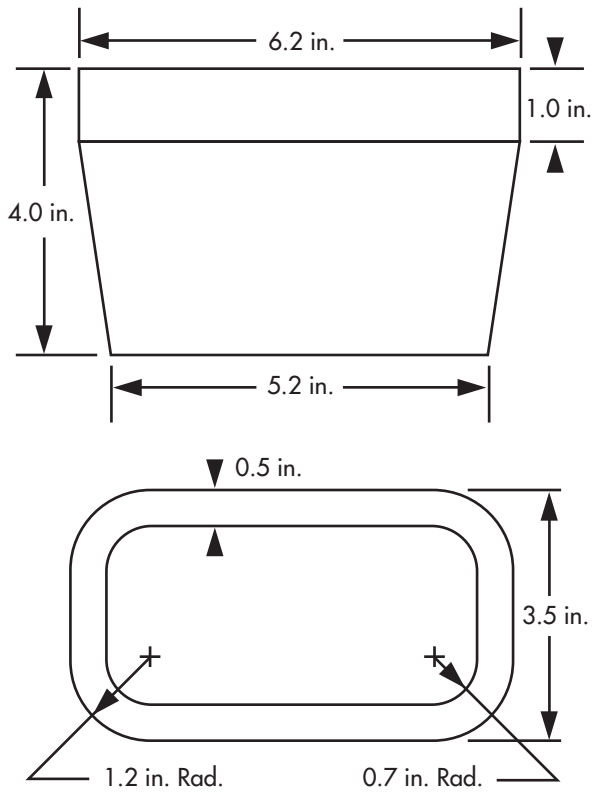

Figure B-7. Small Torso Probe

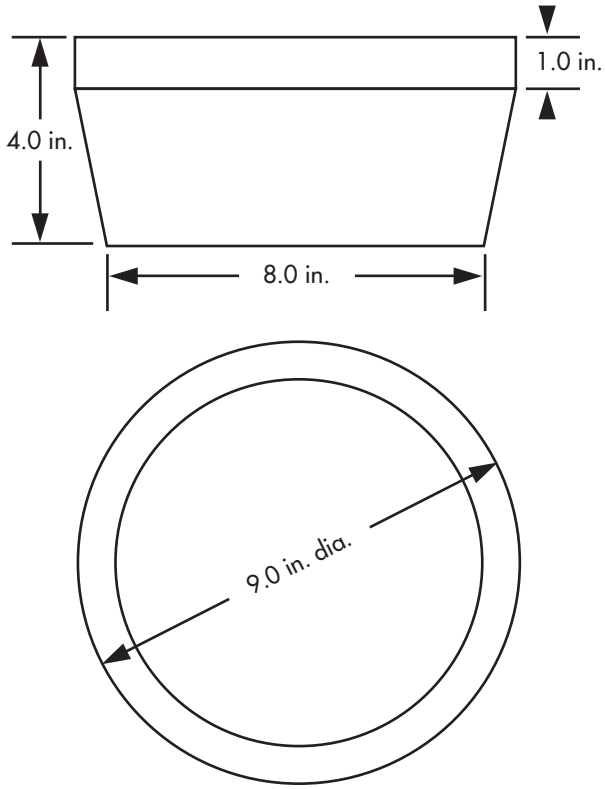

Figure B-8. Large Head Probe

a force of up to 50 pounds. These test probes may be purchased from NRPA [12].

B6.2 Recommendations — When tested in accordance with the procedure in B6.3 below, a non-rigid opening may meet the recommendations in one of two ways:

(1) The opening does not permit complete passage of the Small Torso Probe when tested in accordance with the procedure in B6.3 below.

(2) The opening allows complete passage of the Small Torso Probe and the Large Head Probe when tested in accordance with the procedure in B6.3 below.

A non-rigid opening does not meet the entrapment recommendations if it allows complete passage of the Small Torso Probe but does not allow complete passage of the Large Head Probe.

B6.3 Test Procedure — Place the Small Torso Probe in the opening, tapered end first, with the plane of its base parallel to the plane of the opening. While keeping its base parallel to the plane of the opening, rotate the probe to its most adverse orientation (major axis of probe parallel to major axis of opening). Determine whether the probe can be pushed or pulled through the opening by a force no greater than 50 pounds. If the Small Torso Probe cannot pass completely through the opening, it meets the recommendations.

If the Small Torso Probe passes completely through the opening, place the Large Head Probe in the opening with the plane of its base parallel to the plane of the opening. Again attempt to push or pull the probe through the opening with a force no greater than 50 pounds. If the Large Head Probe can pass completely through the opening, it meets the recommendations.

APPENDIX C
Summary Characteristics of Organic and Inorganic Loose-Fill Materials, and Unitary Synthetic Materials

ORGANIC LOOSE MATERIAL
wood chips, bark mulch, engineered wood fibers, etc.

Fall Absorbing Characteristics
- Cushioning effect depends on air trapped within and between individual particles, and pre-supposes an adequate depth of material. See Table 1 for performance data.

Installation/Maintenance
- Should not be installed over existing hard surfaces (e.g., asphalt, concrete).
- Requires a method of containment (e.g., retaining barrier, excavated pit).
- Requires good drainage underneath material.
- Requires periodic renewal or replacement and continuous maintenance (e.g., leveling, grading, sifting, raking) to maintain appropriate depth and remove foreign matter.

Advantages
- Low initial cost.
- Ease of installation.
- Good drainage.
- Less abrasive than sand.
- Less attractive to cats and dogs (compared to sand).
- Attractive appearance.
- Readily available.

Disadvantages
The following conditions may reduce cushioning potential:
- Rainy weather, high humidity, freezing temperatures.
- With normal use over time, combines with dirt and other foreign materials.
- Over time, decomposes, is pulverized, and compacts requiring replenishment.
- Depth may be reduced by displacement due to children's activities or by material being blown by wind.
- Can be blown or thrown into children's eyes.
- Subject to microbial growth when wet.
- Conceals animal excrement and trash (e.g., broken glass, nails, pencils, and other sharp objects that can cause cut and puncture wounds).
- Spreads easily outside of containment area.
- Can be flammable.
- Subject to theft by neighborhood residents for use as mulch.

INORGANIC LOOSE MATERIAL
sand and gravel

Fall Absorbing Characteristics
- See Table 1 for performance data.

Installation/Maintenance
- Should not be installed over existing hard surfaces (e.g., asphalt, concrete).
- Method of containment needed (e.g., retaining barrier, excavated pit).
- Good drainage required underneath material.
- Requires periodic renewal or replacement and continuous maintenance (e.g., leveling, grading, sifting, raking) to maintain appropriate depth and remove foreign matter.
- Compacted sand should periodically be turned over, loosened, and cleaned.
- Gravel may require periodic break up and removal of hard pan.

Advantages
- Low initial cost.
- Ease of installation.
- Does not pulverize.
- Not ideal for microbial growth.
- Nonflammable.
- Materials are readily available.
- Not susceptible to vandalism except by contamination.
- Gravel is less attractive to animals than sand.

Disadvantages
The following conditions may reduce cushioning potential:
- Rainy weather, high humidity, freezing temperatures.
- With normal use, combines with dirt and other foreign materials.
- Depth may be reduced due to displacement by children's activities and sand may be blown by wind.
- May be blown or thrown into children's eyes.
- May be swallowed.
- Conceals animal excrement and trash (e.g., broken glass, nails, pencils, and other sharp objects that can cause cut and puncture wounds).

Sand
- Spreads easily outside of containment area.
- Small particles bind together and become less cushioning when wet; when thoroughly wet, sand reacts as a rigid material.
- May be tracked out of play area on shoes; abrasive to floor surfaces when tracked indoors; abrasive to plastic materials.
- Adheres to clothing.
- Susceptible to fouling by animals.

Gravel

- Difficult to walk on.
- If displaced onto nearby hard surface pathways, could present a fall hazard.
- Hard pan may form under heavily traveled areas.

INORGANIC LOOSE MATERIAL
shredded tires

Fall Absorbing Characteristics

- See Table 1 for performance data. Manufacturer should be contacted for information on Critical Height of materials when tested according to ASTM F1292.

Installation/Maintenance

- Should not be installed over existing hard surfaces (e.g., asphalt, concrete).
- Method of containment needed (e.g., retaining barrier, excavated pit).
- Good drainage required underneath material.
- Requires continuous maintenance (e.g., leveling, grading, sifting, raking) to maintain appropriate depth and remove foreign matter.

Advantages

- Ease of installation.
- Has superior shock absorbing capability.
- Is not abrasive.
- Less likely to compact than other loose-fill materials.
- Not ideal for microbial growth.
- Does not deteriorate over time.

Disadvantages

- Is flammable.
- Unless treated, may cause soiling of clothing.
- May contain steel wires from steel belted tires.
  Note: Some manufacturers provide a wire-free guarantee.
- Depth may be reduced due to displacement by children's activities.
- May be swallowed.

UNITARY SYNTHETIC MATERIALS
rubber or rubber over foam mats or tiles, poured in place urethane and rubber compositions

Fall Absorbing Characteristics

- Manufacturer should be contacted for information on Critical Height of materials when tested according to ASTM F1292.

Installation/Maintenance

- Some unitary materials can be laid directly on hard surfaces such as asphalt or concrete. Others may require expert under-surface preparation and installation by the manufacturer or a local contractor. Materials generally require no additional means of containment. Once installed, the materials require minimal maintenance.

Advantages

- Low maintenance.
- Easy to clean.
- Consistent shock absorbency.
- Material not displaced by children during play activities.
- Generally low life cycle costs.
- Good footing (depends on surface texture).
- Harbor few foreign objects.
- Generally no retaining edges needed.
- Is accessible to the handicapped.

Disadvantages

- Initial cost relatively high.
- Undersurfacing may be critical for thinner materials.
- Often must be used on almost level uniform surfaces.
- May be flammable.
- Subject to vandalism (e.g., ignited, defaced, cut).
- Full rubber tiles may curl up and cause tripping.
- Some designs susceptible to frost damage.

APPENDIX D
Description of Loose-Fill Surfacing Materials in Table 1

1. Wood Chips — Random sized wood chips, twigs, and leaves collected from a wood chipper being fed tree limbs, branches, and brush.

2. Double Shredded Bark Mulch — Similar to shredded mulch commonly used by homeowners to mulch shrubs and flower beds.

3. Engineered Wood Fibers — Relatively uniform sized shredded wood fibers from recognized hardwoods. Sample contained no bark or leaves.

4. Fine Sand — Particles of white sand purchased in bags marked "play sand." The material was passed through wire-cloth screens of different sizes in accordance with ASTM Standard Method C136-84a and yielded the following results:

Screen Size	*Percent Passing Through Screen*
#16	100
#30	98
#50	62
#100	17
#200	0–1

5. Coarse Sand — Sample was obtained from a supplier to the landscaping and construction trades. ASTM C136-84a test results were:

Screen Size	*Percent Passing Through Screen*
#4	98
#8	73
#16	4
#30	1
#50	0–1

6. Fine Gravel — Sample was obtained from a supplier to the residential landscaping market. Gravel particles were rounded and were generally less than 3/8 inch in diameter. ASTM C136-84a test results were:

Screen Size	*Percent Passing Through Screen*
3/8 inch	100
#3 1/2	93
#4	65
#8	8
#16	5
#30	4

7. Medium Gravel — Particles were rounded as found in river washed or tumbled stone. ASTM C136-84a test results were:

Screen Size	*Percent Passing Through Screen*
1/2 inch	100
3/8 inch	80
5/16 inch	58
#3 1/2	20
#4	8
#8	7
#16	3

8. Shredded Tires — No impact attenuation tests have been conducted by CPSC on these materials. The size of the particles and the method by which they are produced may vary from one manufacturer to another. Therefore, consumers seeking to install such materials as a protective surfacing should request test data from the supplier showing the critical height of the material when tested in accordance with ASTM F1292. In addition, a guarantee should be obtained from the supplier that the material is free from steel wires or other contaminants.

APPENDIX E
Noteworthy Changes to the 1997 Handbook

Maximum Equipment Height

- Added maximum height recommendations for horizontal ladders for both preschool-age and school-age children (12.1.5) and a maximum height recommendation for swings for preschool-age children (12.6.2). These recommendations were added to minimize fall injuries.

Surfacing

- Added information on the use of shredded tires as a protective surfacing material (Table 1 and Appendices C and D). CPSC has received many questions on the shock absorbing properties of shredded tires. While CPSC has not conducted tests on these materials, test data obtained from manufacturers indicates they have superior shock absorbing properties and should be considered as a possible protective surfacing material.

Maintenance

- Revised the maintenance checklist at Appendix A to make it easier to keep public playgrounds maintained for greater safety.

Lead Paint

- Added information on how to address playground equipment with leaded paint (8.1). During 1996, it was discovered that a number of older playgrounds had equipment with paint containing a high level of lead. This new information regarding lead in paint was added to draw attention to this problem and provide information on how to eliminate it.

Use Zones

- Revised recommendations on use (fall) zones to permit use (fall) zones of certain equipment to overlap (5.1.1). Requiring a 12 foot separation between individual pieces of stationary equipment is believed to be excessive and has been burdensome to some child care facilities with limited space for a playground. CPSC does not believe that the reduction in use zones will increase the likelihood of injuries resulting from falls.

- Added use zone recommendations for tot swings (5.1.3). The use zone to the front and rear of single-axis swings is based on the maximum trajectory of a child deliberately jumping from a swing. The CPSC recognizes that children using tot swings are unlikely to engage in this behavior and therefore recommends use zones less than those for conventional single-axis swings.

Protrusions

- Added recommendations addressing clothing entanglement hazard of protrusions on slides and protrusions that point upwards (9.4) and a warning concerning drawstring entanglement (9.2). Incidents of clothing and drawstring entanglement on certain protrusions and other configurations were not adequately addressed by the previous general protrusion recommendations in Section 9.2.

Climbing Ropes

- Added recommendation for acceptable climbing ropes (12.1.7). The addition provides a means to determine when a rope that is secured at both ends does not present a strangulation hazard. The previous edition of the handbook did not provide a means to determine when the rope was secured.

Slides

- Changed recommendations for slides with curved chute cross sections (12.4.4). This change harmonizes the recommendations for these slides with the requirements in the ASTM F1487 voluntary standard.

- Added definition for embankment slides and added an exit use zone recommendation (12.4.6). These were added to clarify what is an embankment slide and what use zone is recommended at the exit.

- Added recommendations for roller slides (12.4.9). These were added to harmonize the CPSC recommendations with the ASTM F1487 voluntary standard.

- Added new figure to clarify how to measure slide slope (Fig. 18). This was added to clarify the intent of the previous recommendation.

Swings

- Added recommendation that fiber ropes not be used to suspend swings (12.6.1). Fiber ropes that unraveled during use have been involved in strangulation incidents.

- Added swing seat height recommendations for all swings (12.6.2 & 12.6.3). These recommendations are intended to minimize cratering of loose-fill protective surfacing under the swings.

Seesaws

- Added a recommendation for maximum angle of fulcrum seesaws (12.3). The addition is intended to minimize the likelihood that a child will be propelled forward when the seesaw reaches its maximum height.

Other Noteworthy Changes

- Revised the introduction to state that the guidelines in the handbook do not apply to adult fitness trail equipment, soft contained play equipment, or water play facilities (1). The maximum user of playground equipment covered by the recommendations in this handbook is a 95th percentile 12 year old. Therefore, certain dimensions on adult fitness trail equipment may not apply. Soft contained play equipment is generally designed to prevent falls, therefore, the surfacing and use zone recommendations may not apply. Water play facilities are relatively new and were not considered when the recommendations in the handbook were being drafted.

- Added list of equipment not recommended for preschool-age children and provided a list identifying where to find specific recommendations for preschool-age equipment (6.3). These additions are for the convenience of persons seeking information on playground equipment for preschool-age children.

- Changed the recommendations for the diameter of handgripping components (10.2.1). At the time the recommendations for the 1991 handbook were being drafted ladder rungs were commonly fabricated from 1¼ inch steel pipe having an outside diameter (O.D.) of 1.66 inches. Since that time, steel pipe with an O.D. of 1.5 inches has become readily available and is closer to the optimum size recommended for components that will be grasped by a child to support full body weight.

- Changed the recommendation for handrail height on stairways (10.3.1). Handrail height more appropriate for preschool-age children has been added.

This Handbook is in the public domain. This copy is in camera-ready format. It may be reproduced in whole or in part without permission and in unlimited quantities. Also, the Handbook, in its entirety or in text only format, is available for downloading/printing at CPSC's World Wide Web site on the Internet. The CPSC Web address is: **http://www.cpsc.gov**

If reproduced, the Commission would appreciate knowing how it is used. Send this information:

Office of Information and Public Affairs
U.S. Consumer Product Safety Commission
Washington, D.C. 20207.

Public Playground Safety Checklist

Here are 10 important tips for parents and community groups to keep in mind to help ensure playground safety.

1 Make sure ***surfaces*** around playground equipment have at least 12 inches of wood chips, mulch, sand, or pea gravel, or are mats made of safety-tested rubber or rubber-like materials.

2 Check that protective ***surfacing extends*** at least 6 feet in all directions from play equipment. For swings, be sure surfacing extends, in back and front, twice the height of the suspending bar.

3 Make sure play structures more than 30 inches high are ***spaced*** at least 9 feet apart.

4 Check for ***dangerous hardware,*** like open "S" hooks or protruding bolt ends.

5 Make sure ***spaces*** that could trap children, such as openings in guardrails or between ladder rungs, measure less than 3.5 inches or more than 9 inches.

6 Check for ***sharp points or edges*** in equipment.

7 Look out for ***tripping hazards,*** like exposed concrete footings, tree stumps, and rocks.

8 Make sure elevated surfaces, like platforms and ramps, have ***guardrails*** to prevent falls.

9 Check ***playgrounds regularly*** to see that equipment and surfacing are in good condition.

10 ***Carefully supervise children*** on playgrounds to make sure they're safe.

For additional copies, write: Playground Checklist, CPSC, Washington, DC 20207; call CPSC's toll-free hotline at 1-800-638-2772; or visit CPSC's web site at www.cpsc.gov.

009711

**U.S. CONSUMER PRODUCT
SAFETY COMMISSION**

WASHINGTON D.C. 20207

AN EQUAL OPPORTUNITY EMPLOYER

OFFICIAL BUSINESS

PENALTY FOR PRIVATE USE, $300

DISHWASHING PROCEDURE

The best way to wash, rinse, and disinfect dishes and eating utensils is to use a dishwasher with a sanitizing cycle. If a dishwasher is not available or cannot be installed, a three-compartment sink will be needed to wash, rinse, and disinfect dishes. A two-compartment or one-compartment sink can be used in child care facilities (located in an occupied residence) licensed for 12 or fewer children by adding one or two dishpans, as needed. In addition to three compartments or dishpans, you will need a dish rack with a drainboard to allow dishes and utensils to air dry. To wash, rinse, and disinfect dishes by hand:

- Fill one sink compartment or dishpan with hot tap water and a dishwashing detergent.
- Fill the second compartment or dishpan with hot tap water.
- Fill the third compartment or dishpan with hot tap water and 1-1/2 tablespoons of liquid chlorine bleach for each gallon of water.
- Scrape dishes and utensils and dispose of excess food.
- Immerse scraped dish or utensil in first sink compartment or dishpan and wash thoroughly.
- Rinse dish or utensil in second dishpan of clear water.
- Immerse dish or utensil in third dishpan of chlorinated water for at least 1 minute.
- Place dish or utensil in rack to air dry.

Note: Food preparation and dishwashing sinks should only be used for these activities and should never be used for routine handwashing or diaper changing activities.

Source: The ABCs of Safe and Healthy Child Care: A Handbook for Child Care Providers, Department of Health and Human Services, U.S. Public Health Service, Centers for Disease Control and Prevention.

HANDWASHING PROCEDURE

- Always use warm, running water and a mild, preferably liquid, soap. Antibacterial soaps may be used, but are not required. Premoistened cleansing toweletts do not effectively clean hands and do not take the place of handwashing.

- Wet the hands and apply a small amount (dime to quarter size) of liquid soap to hands.

- Rub hands together vigorously until a soapy lather appears and continue for at least 15 seconds. Be sure to scrub between fingers, under fingernails, and around the tips and palms of the hands.

- Rinse hands under warm running water. Leave the water running while drying hands.

- Dry hands with a clean, disposable (or single use) towel, being careful to avoid touch the faucet handles or towel holder with clean hands.

- Turn the faucet off using the towel as a barrier between your hands and the faucet handle.

- Discard the used towel in a trash can lined with a fluid-resistant (plastic) bag. Trash cans with foot-petal operated lids are preferable.

- Consider using hand lotion to prevent chapping of hands. If using lotions, use liquids or tubes that can be squirted so that the hands do not have direct contact with container spout. Direct contact with the spout could contaminate the lotion inside the container.

- When assisting a child in handwashing, either hold the child (if an infant) or have the child stand on a safety step at a height at which the child's hands can hang freely under the running water. Assist the child in performing all of the above steps and then wash your own hands.

Source: The ABCs of Safe and Healthy Child Care: A Handbook for Child Care Providers , Department of Health and Human Services, U.S. Public Health Service, Centers for Disease Control and Prevention.

Procedure for Diapering a Child

1. Organize needed supplies within reach:
   - fresh diaper and clean clothes (if necessary)
   - dampened paper towels or premoistened toweletts for cleaning child's bottom
   - child's personal, labeled, ointment (if provided by parents)
   - trash disposal bag

2. Place a disposable covering (such as roll paper) on the portion of the diapering table where you will place the child's bottom. Diapering surfaces should be smooth, nonabsorbent, and easy to clean. Don't use areas that come in close contact with children during play such as couches, floor areas where children play, etc.
3. If using gloves, put them on now.

4. Using only your hands, pick up and hold the child away from your body. Don't cradle the child in your arms and risk soiling your cloths.

5. Lay the child on the paper or towel.

6. Remove soiled diaper (and soiled clothes).

7. Put disposable diapers in a plastic-lined trash receptacle.

8. Put soiled reusable diaper and /or soiled clothes WITHOUT RINSING in a plastic bag to give to parents.

9. Clean child's bottom with a premoistened disposable toweletts or a dampened, single-use, disposable towel.

10. Place the soiled toweletts or towel in a plastic-lined trash receptacle.

11. If the child needs a more thorough washing, use soap, running water, and pater towels.

12. Remove the disposable covering from beneath the child. Discard it in a plastic-lined receptacle.

13. If you are earing gloves, remove and dispose of them now in a plastic-lined receptacle.

14. Wash your hands. NOTE: The diapering table should be next to a sink with running water so that you can wash your hands without leaving the diapered child unattended. However, if a sink is not within reach of the diapering table, **don't leave the child unattended on the diapering table** to go to a sink; wipe your hands with a premoistened toweletts instead. **NEVER** leave a child alone on the diapering table.

APPENDIX G-1

15. Wash the child's hands under running water.

16. Diaper and dress the child.

17. Disinfect the diapering surface immediately after you finish diapering the child.

18. Return the child to the activity area.

19. Clean and disinfect:
    - The diapering area,
    - all equipment or supplies that were touched, and
    - soiled crib or cot, if needed.

20. Wash your hands under running water.

Source: The ABCs of Safe and Healthy Child Care: A Handbook for Child Care Providers , Department of Health and Human Services, U.S. Public Health Service, Centers for Disease Control and Prevention..

APPENDIX G-2

Cleaning and Disinfection Procedures

Keeping the child care environment clean and orderly is very important for health, safety, and the emotional well-being of both children and providers. One of the most important steps in reducing the number of germs, and therefore the spread of disease, is the thorough cleaning of surfaces that could possibly pose a risk to children or staff. Surfaces considered most likely to be contaminated are those with which children are most likely to have close contact. These include toys that children put in their mouths, cribs rails, food preparation areas, and surfaces likely to become very contaminated with germs, such as diaper-changing areas.

Routine cleaning with soap and water is the most useful method for removing germs from surfaces in the child care setting. Good mechanical cleaning (scrubbing with soap and water) physically reduces the numbers of germs from the surface, just as handwashing reduces the numbers of germs from the hands. Removing germs in the child care setting is especially important for soiled surfaces which cannot be treated with chemical disinfectants, such as some upholstery fabrics.

However, some items and surfaces should receive an additional step, **disinfection**, to kill germs after cleaning with soap and rinsing with clear water. Items that can be washed in a dishwasher or hot cycle of a washing machine do not have to be disinfected because these machines use water that is hot enough for a long enough period of time to kill most germs. The disinfection process uses chemicals that are stronger than soap and water. Disinfection also usually requires soaking or drenching the item for several minutes to give the chemical time to kill the remaining germs. Commercial products that meet the Environmental Protection Agency's (EPA's standards for "hospital grade" germicides (solutions that kill germs) may be used for this purpose. One of the most commonly used chemicals for disinfection in child care settings is a homemade solution of household bleach and water. Bleach is cheap and easy to get. The solution of bleach and water is easy to mix, is nontoxic, is safe if handled properly, and kill most infectious agents. (Be aware that some infectious agents are not killed by bleach. For example, cryptosporidia is only killed ammonia or hydrogen peroxide.)

A solution of bleach and water loses its strength very quickly and easily. It is weakened by organic material, evaporation, heat, and sunlight. Therefore, bleach solutions should be mixed fresh each day to make sure it is effective. Any leftover solution should be discarded and the end of the day. NEVER mix bleach with anything but fresh tap water! Other chemicals may react with bleach and create and release a toxic chlorine gas.

Keep the bleach solution you mix each day in a cool place out of direct sunlight and out of the reach of children. (Although a solution of bleach and water mixed as shown in the accompanying box should not be harmful if accidentally swallowed, you should keep all chemicals away from children.)

APPENDIX H-1

If you use a commercial (brand-name) disinfectant, read the label and always follow the manufacturer's instructions exactly.

Recipe for Bleach Disinfecting Solution
(For use in bathroom diapering areas, etc.)

1/4 cup bleach
1 gallon of cool water

OR

1 tablespoon bleach
1 quart cool water

Add the house hold bleach (5.25% sodium hypochlorite) to the water.

Recipe for Weaker
Bleach Disinfecting Solution
(For use on toys, eating utensils, etc.)

1 tablespoon bleach
1 gallon cool water

Add the bleach to the water

Washing and Disinfecting Toys

- Infants and toddlers should not share toys. Toys that children (particularly infants and toddlers) put in their mouths should be washed and disinfected between uses by individual children. Toys for infants and toddlers should be chosen with this in mind. If you can't wash a toy, it probably is not appropriate for an infant or toddler.

- When an infant or toddler finishes playing with a toy, you should retrieve it form the play area and put it in a bin reserved for dirty toys. This bin should be out of reach of the children. Toys can be washed at a later, more convenient time, and then transferred to a bin for clean toys and safely reused by the other children.

- To wash and disinfect a hard plastic toy:
    - Scrub the toy in warm, soapy water. Use a brush to reach into the crevices.
    - Rinse the toy in clean water.
    - Immerse the toy in a mild bleach solution (see above) and allow it to soak in the solution for 10-20 minutes.
    - Remove the toy from the bleach and rinse well in cool water.
    - Air dry.
- Hard plastic toys that are washed in a dishwasher or cloth toys washed in the hot water cycle of the hot water cycle of a washing machine do not need to be additionally disinfected.

- Children in diapers should only have washable toys. Each group of children should have its own toys. Toys should not be shared with other groups

- Stuffed toys used by only a single child should be cleaned in a washing machine every week, or more frequently if heavily soiled.

- Toys and equipment used by older children and not put into their mouths should be cleaned at least weekly and when obviously soiled. A soap and water wash followed by clear water rinsing and air drying should be adequate. No disinfection is required. (These types of toys and equipment include blocks, dolls, tricycles, trucks, and other similar toys.)

- Do not use wading pools for children in diapers.

- Water play tables can spread germs. To prevent this:
    - Disinfect the table with chlorine bleach solution before filling it with water.
    - Disinfect the all toys to be used in the table with chlorine bleach solution. Avoid using sponge toys. They can trap bacteria and are difficult to clean.
    - Have all children wash their hands before and after playing in the water table.
    - Do not allow children with open sores or wounds to play in the water table.
    - Carefully supervise the children to make sure they don't drink the water.
    - Discard water after play is over.

Washing and Disinfecting Bathroom and Other Surfaces

Bathroom surfaces, such as faucet handles and toilet seats, should be washed and disinfected several times a day, if possible, but at least once a day or when soiled. The bleach and water solution or chlorine-containing scouring powers or other commercial

bathroom surface cleaner/disinfectants can be used in these areas. Surfaces that infants and young toddlers are likely to touch or mouth, such as crib rails, should be washed with soap and water and disinfected with a nontoxic disinfectant, such as bleach solution, at least once every day, more often if visibly soiled. After the surface has been drenched or soaked with the disinfectant for at least 10 minutes, surfaces likely to be mouthed should be thoroughly wiped with a fresh towel moistened with tap water. Be sure not to use a toxic cleaner on surfaces likely to be mouthed. Floors should be washed and disinfected at least once a day and whenever soiled.

Washing and Disinfecting Diaper Changing Areas

Diaper Changing Areas should:

- Only be used for changing diapers.
- Be smooth and nonporous, such as Formica (NOT wood).
- Have a raised edge or low "fence" around the area to prevent a child from falling off.
- Be next to a sink with hot and cold running water.
- Not be used to prepare food, mix formula, or rinse pacifiers.
- Be easily accessible to providers.
- Be out of reach of children.

Diaper changing areas should be cleaned and disinfected after each diaper changer as follows:

- Clean the surface with soap and water and rinse with clear water.
- Dry the surface with a paper towel.
- Thoroughly wet the surface with the recommended bleach solution.
- Air dry. Do not wipe.

Washing and Disinfecting Clothing, Linen, and Furnishings

Do not wash or rinse clothing soiled with fecal material in the child care setting. You may empty solid stool into the toilet, but be careful not to splash or touch toilet water with your hands. Put the soiled clothes in a plastic bag and seal the bag to await pick up by the child's parent or guardian at the end of the day. Always wash you hands after handling soiled clothing.

Explain to parents that washing or rinsing soiled diapers and clothing increases the chances that you and the children may be exposed to germs that cause diseases. Although receiving soiled clothes isn't pleasant, remind parents that this policy protects the health of all children and providers. Each item of sleep equipment, including cribs, cots, mattresses, blankets, sheets, etc., should be cleaned and sanitized before being assigned to a specific child. The bedding items should be labeled with that child's name, and should only be used by that child. Children shall not share bedding. Infants' linens (sheets, pillowcases, blankets) shall be cleaned and sanitized

daily, and crib mattresses shall be cleaned and sanitized weekly and when soiled or wet. Linens from beds of older children shall be laundered at least weekly and whenever soiled. However, if a child inadvertently used another child's bedding, you shall change the linen and mattress cover before allowing the assigned child to use it again. All blankets shall be changed and laundered routinely at least once a month.

Cleaning up Body Fluid Spills

Spills of body fluids, including blood, feces, nasal and eyed discharges, saliva, urine, and vomit shall be cleaned up immediately. Ware gloves unless the fluid can be easily contained by the material (e.g., paper tissue or cloth) being used to clean it up. Be careful not to get any of the fluid you are cleaning in your eyes, nose, mouth or any open sores you may have. Clean and disinfect any surfaces, such as counter tops and floors, on which body fluids have been spilled. Discard fluid-contaminated material in a plastic bag that has been securely sealed. Mops used to clean up body fluids should be (1) cleaned, (2) rinsed with a disinfecting solution, (3) wrung as dry as possible, and (4) hung to dry completely. Be sure to wash your hands after cleaning up any spill.

Source: The ABCs of Safe and Healthy Child Care: A Handbook for Child Care Providers, Department of Health and Human Services, U.S. Public Health Service, Centers for Disease Control and Prevention.

TABLE OF CONTENTS

INTRODUCTION 3

GENERAL INFORMATION 4

IMMUNIZATION REQUIREMENTS 5

EXCLUSION CRITERIA 7

CHICKENPOX (VARICELLA) & SHINGLES (VARICELLA ZOSTER) 8

CYTOMEGALOVIRUS (CMV) 9

DIARRHEAL DISEASES 9

E. COLI O157:H7 10

FIFTH DISEASE 10

“FLU” (INFLUENZA) 11

HAND-FOOT-AND-MOUTH DISEASE 11

HEAD LICE.....12

HEPATITIS A 12

HEPATITIS B 13

HEPATITIS C 13

HIV/AIDS 13

IMPETIGO 14

MEASLES 14

MENINGITIS 15

MUMPS 15

“PINK EYE” (CONJUNCTIVITIS) 16

APPENDIX I-1

PINWORMS 16

RESPIRATORY SYNCYTIAL VIRUS (RSV) 16

RINGWORM 17

SCABIES 17

"STREP THROAT" (STREPTOCOCCAL PHARYNGITIS)
& SCARLET FEVER. 18

TUBERCULOSIS (TB) 18

WHOOPING COUGH (PERTUSSIS) 18

EXAMPLE PERMISSION SLIP TO COLLECT STOOL SPECIMENS AND
RECEIVE TEST RESULTS FOR OUTBREAKS OF DIARRHEAL DISEASES 20

ATTACHMENT A
"RECOMMENDATIONS FOR THE CONTROL OF HEAD LICE IN THE CHILD CARE SETTING"

APPENDIX I-2

INTRODUCTION

COMMUNICABLE DISEASES/CONDITIONS AND RETURN TO CHILD CARE

Child care providers frequently must make decisions regarding when children with communicable diseases/conditions should be allowed to attend or return to the out-of-home child care setting (a large child care center or where child care is provided in a private residence for more than one child). We hope the information provided in this booklet will help with these decisions. It contains information about the most common or important communicable diseases/conditions and how they are spread. Information is listed about the different times during which infectious agents may be transmitted from one person to another, and when it is usually safe for someone who has one of these conditions to return to the center. The "return to child care times" are based on the usual period of time that a person is considered to be contagious — **not** on the period of time that may be necessary for full clinical recovery from the signs or symptoms of an illness which may vary a great deal from person to person.

While **this booklet will serve as a guide** for child care attendance of children with communicable conditions, the Mississippi State Department of Health (MSDH) welcomes the opportunity to help with your decisions. You may contact your district health department office (see district map on page18) or the Division of Epidemiology at the MSDH in Jackson to speak with a consultant.

****

***** THIS booklet is NOT intended to be used to DIAGNOSE an illness or infection. It SHOULD NOT REPLACE a diagnosis by trained MEDICAL personnel.*****

GENERAL INFORMATION

Small children who are cared for in out-of-home group settings are at a greater risk of acquiring and spreading a contagious disease. Small children are highly susceptible to contagious diseases since most of them have not been exposed to many of the most common germs and therefore do not have any immunity to them. Young children also have certain habits (e.g., putting their fingers and other objects in their mouths) that can easily spread germs. Even though contagious diseases/conditions will occur in a child care setting, the child care provider must do everything he or she can to prevent and control the spread of disease. **The use of common-sense hygienic practices, especially frequent and thorough handwashing cannot be stressed enough!** Also, making sure that staff and children are up to date on their immunizations helps to lessen the risk of exposure to contagious diseases.

Reportable diseases: There are 4 classes of reportable diseases. Class I diseases are those of major public health importance and are to be reported upon first knowledge or suspicion and are usually reported by the physician, hospital or laboratory. However, the MSDH encourages child care providers who know of a child in their facility who has been diagnosed with a disease such as meningitis or measles to report it to the Health Department. This can sometimes help to expedite the investigation. Class II diseases may require public health intervention also, especially if there are several cases in one room (e.g., diarrheal diseases such as shigella and giardia).

When a Class I reportable disease is reported to the MSDH, there will be an investigation. The immediacy of the response by the MSDH and the extent of the investigation depends on the disease the person has. For example, if a child has been reported to have meningococcal meningitis, an investigation would take place as soon as the report is received. It is the goal of the MSDH to provide preventive medication to those for whom it would be indicated within 24 hours of receiving the report. A current list of the reportable diseases is provided in Appendix B of the Child Care Rules and Regulations.

Outbreaks/parental permission for laboratory tests: During times when there are outbreaks of *Giardia, Shigella* infection, etc., large numbers of stool specimens may be requested by the MSDH. The MSDH recommends that child care facilities obtain permission from parents or guardians at the time of enrollment for the child care facility to collect these stool specimens and receive the laboratory results if and when such an outbreak occurs. These laboratory tests would be done by the MSDH Laboratory free of charge. The laboratory test results would be sent to the child care facility and given to the parents/guardians by the child care facility for them to give to the child's physician. (See sample permission slip on page 17)

Handouts: It is good practice to keep parents informed as to what diseases might be occurring in the child care facility so that they can be alert to signs and symptoms of diseases and observe their children for them. We have provided a packet with fact sheets/handouts on certain diseases for you to give to parents.

CHILD CARE IMMUNIZATION REQUIREMENTS
(FOR ATTENDEES AND STAFF)

ATTENDEES

The MSDH regulations governing the licensure of child care facilities mandate that each child in a licensed facility have immunizations according to the recommended immunization schedule. These children are to be **age-appropriately immunized** and must have a Certificate of Immunization Compliance (Form 121) or a Certificate of Medical Exemption (Form 122) on file at the child care facility and readily accessible for review by the MSDH. The Form 121 must be signed by the District Health Officer, a physician, nurse or designee. The medical exemption, Form 122, **MUST** be signed by the District Health Officer. Children enrolled in licensed child care facilities and public and private schools in Mississippi may be exempt for *medical reasons only* and not for religious reasons.

Children usually begin their routine immunizations between 6 weeks and 2 months of age. The immunizations that are currently **required** at the age-appropriate times for child care are: DTaP (diphtheria, tetanus, pertussis), polio, MMR (measles, mumps, rubella), and HIB (*H. Influenzae* type b). Hepatitis B vaccine is a recommended vaccine, and is usually started at birth to 2 months of age. Hepatitis B is **not required for child care** attendance but **is required for entry into 5 year old kindergarten.**

As of August 01, 2002, one (1) dose of Varicella (chicken pox) vaccine is required on or after the 1st birthday and is required for entry into five (5) year old kindergarten. Varicella is not required if a history of the disease is documented.

Children enrolled in a licensed child care facility or Head Start Center are expected to be age appropriately immunized. All children must have one of the following forms before enrollment in a licensed Child Care/Head Start facility.

1. Certificate of Immunization Compliance (Form 121). This form must be signed by the District Health Officer, a physician, nurse or designee.

2. Certificate of Medical Exemption (Form 122). This form must be approved and signed by the Mississippi Department of Health District Health Officer from the public health district or the State Epidemiologist.

STAFF

Anyone (whether full or part-time and even if they are the owner/director) who works in a licensed child care facility must have a Certificate of Immunization Compliance (Form 121) or a Certificate of Medical Exemption from Immunization Requirements for Adults (Form 132) on file and readily accessible for review by the MSDH. The requirement for adults is that they must show proof of immunity to **measles** (rubeola or "red" measles) and **rubella** ("German"or "3-day" measles).

Proof of immunity to measles: Persons born prior to 01-01-1957 are assumed to have natural immunity to measles. Persons born on or after 01-01-1957 must show proof of immunity in one of the following ways:

1. A **physician's statement** saying that the person has had measles disease.

2. **Serological (a blood test)** confirmation of measles immunity.

3. A record of **2 doses** of measles-containing vaccine (usually given as MMR) given on or after the first birthday and on or after 01-01-1968. There must be a minimum time interval of 30 days between the 2 doses.

Proof of immunity to rubella: All child care workers, **regardless of age**, must show proof of immunity to rubella in one of the following ways:

1. **Serological (blood test)** confirmation of rubella immunity.

2. A **rubella vaccination** received on or after 12 months of age and on or after 01-01-1969.

The MSDH does not provide serological testing for measles and rubella for the purpose of child care/school attendance or private employment. Those who wish to have a blood test for proof of immunity to measles and/or rubella should see their private physician.

The Child Care Licensure Division of the MSDH checks the immunization records in child care facilities during regular program reviews. District Immunization Representatives also visit child care centers on a random basis to inspect the immunization records of the children and the employees. The purpose of these visits is to verify the presence of the Certificates of Immunization Compliance. These visits also help to ensure adequate immunization of children enrolled in child care facilities.

EXCLUSION CRITERIA

Small children can become ill very quickly. The child care provider should observe each child's health throughout the time the child is in their care. If the child care provider observes signs and symptoms of illness that would require removal from the facility, he/she should contact the parents/guardians to have the child picked up and continue to observe the child for other signs and symptoms. **If the child is not responding to you, is having trouble breathing, or is having a seizure or convulsion, call 911.**

The following conditions require exclusion from child care:

Fever : Defined as 100°F or higher taken under the arm, 101°F taken orally, or 102°F taken rectally. For children 4 months or younger, the lower rectal temperature of 101°F is considered a fever threshold.

Diarrhea: Frequent (3 or more episodes in a 24 hour period) runny, watery, or bloody stools. **According to CDC recommendations, a child who is not toilet trained and has diarrhea should be excluded from child care settings regardless of the cause.**

Vomiting: Two or more times in a 24 hour period

Rash: Body rash with a fever

Sore throat: Sore throat with fever and swollen glands

Severe coughing: The child gets red or blue in the face or makes high-pitched whooping sound after coughing.

Eye discharge: Thick mucus or pus draining from the eye

Jaundice: Yellow eyes and skin

Irritability: Continuous irritability and crying

CHICKENPOX (VARICELLA)

Chickenpox is a highly infectious viral disease that begins with small red bumps that turn into blisters after several hours. The blisters generally last for 3-4 days and then begin to dry up and form scabs. These lesions (bumps/blisters) almost always appear first on the trunk rather than the extremities.

Mode of transmission: Airborne droplets of nose and throat secretions coughed into the air by someone who has chickenpox. Also by direct contact with articles freshly soiled with discharge from the blisters and/or discharge from the nose and mouth (e.g., tissues, handkerchiefs, etc.).

Notification: Notify parents/guardians and staff members that a case of chickenpox has occurred, especially those parents whose child is taking steroid medications, being treated with cancer or leukemia drugs or has a weakened immune system for some reason. Staff members who are pregnant and have never had chickenpox disease or the chickenpox vaccine should consult their physician immediately. A special preventive treatment may be indicated for those with a weakened immune system and non-immune pregnant women. This treatment must be given **within 96 hours** of the exposure to be effective.

Vaccine: As of August 01, 2002, one (1) dose of Varicella (chicken pox) vaccine is required on or after the 1st birthday and is required for entry into five (5) year old kindergarten. Varicella is not required if a history of the disease is documented.

Return to child care: Once the diagnosis has been made, determine the day that the blisters first appeared. The child may return to child care on the 6th day after the blisters first appeared or earlier if all the lesions are **crusted and dry and no new ones are forming.** Keeping the child home until all the lesions are completely healed is unnecessary and results in excessive absences.

SHINGLES (VARICELLA ZOSTER)

Shingles (varicella zoster) is a reactivation of the chickenpox virus (varicella). After the initial infection with chickenpox, the virus continues to lie dormant (inactive) in a nerve root. We tend to think of the elderly and immunosuppressed individuals as the ones who have shingles; however, it can and does occur sometimes in children. The lesions or blisters of shingles resemble those of chickenpox and usually appear in just one area or on one side (unilateral) of the body and run along a nerve pathway. A mild shingles-like illness has been reported in healthy children who have had the chickenpox vaccine. This is a rare occurrence.

Mode of transmission: It is possible for someone who has never had chickenpox disease or the vaccine to get chickenpox by coming in contact with the fluid from the lesions of someone who has shingles. Shingles itself is not transmissible. A person who has shingles does not transmit chickenpox through the air as does someone who has chickenpox disease.

Return to child care: The child who has shingles may attend child care if the lesions can be covered by clothing. If the lesions cannot be covered, the child should be excluded until the lesions are crusted and

dry. Staff members who have shingles pose little risk to others since the lesions would be covered by clothing or a dressing on exposed areas. **Thorough hand washing** is warranted whenever there is contact with the lesions.

> **NOTE:** Staff members, especially those who are pregnant, who have no history of chickenpox disease or chickenpox vaccine, should not take care of children with shingles during the time they have active or fluid-filled lesions.

CYTOMEGALOVIRUS (CMV)

CMV is a viral illness that most people become infected with during childhood. Small children usually have no symptoms when they become infected, but older children may develop an illness similar to mononucleosis with a fever, sore throat, malaise or feeling very tired and an enlarged liver.

Mode of transmission: CMV is spread from person to person by direct contact with body fluids such as urine, saliva or blood. The virus can also be passed from the mother to the baby before birth.

Pregnancy: Rarely, a woman may contract the disease for the first time during pregnancy which may pose a risk to the fetus causing certain birth defects. CDC recommends that women who are child care providers and who expect to become pregnant should be tested for antibodies to CMV and if the test shows no evidence of previous CMV infection, they should reduce their contact with infected children by working, at least temporarily, with children 2 years of age and older where there is less circulation of the virus. Also, they should avoid kissing an infected child on the lips, and as with any child care situation, **wash hands** thoroughly after each diaper change and contact with a child's saliva. If contact with children does not involve exposure to saliva or urine, there should be no fear of potential infection with CMV.

Return to child care: There is no need to exclude children with CMV from child care as long as they do not have a fever since the virus may be excreted in urine and saliva for many months and may persist or there may be recurring episodes for several years following the initial infection. CMV is a virus that may persist as a latent infection and recur when a person becomes immunosuppressed with conditions such as cancer, AIDS, etc.

DIARRHEAL DISEASES (e.g., campylobacteriosis, cryptosporidiosis, giardiasis, rotavirus, salmonellosis, shigellosis) - See *E. coli* O157:H7 and Hepatitis A sections for specific return-to-child- care recommendations regarding these 2 diseases.

Diarrhea is defined as frequent (3 or more episodes within a 24 hour period), runny, watery stools and can be caused by different types of organisms such as viruses, bacteria and parasites.

Mode of transmission: Diarrheal diseases are generally transmitted or spread by ingesting food or water or by putting something in the mouth such as a toy that has been contaminated with the feces (stool/poop) of an infected person or animal. In some cases such as with *Salmonella* and *E. coli*

O157:H7, the disease is transmitted by eating raw or undercooked meats (especially ground beef and poultry) and unpasteurized milk and fruit juices.

Notification: Notify parents/guardians of children in the involved room of the illness. Ask that they have any child with diarrhea, severe cramping or vomiting evaluated by a physician and that they inform the day care of diarrheal illness in their child and family.

Outbreak situation: Most diarrheal diseases are reportable to the State Department of Health. When there are 2 or more cases of a diarrheal disease in one room, more extensive notification may need to be done as stool specimens may need to be collected. In this case, the director of the child care should consult with the Public Health District Epidemiology Nurse or the Division of Epidemiology at the State Department of Health. (See Public Health District Map on page 18 for addresses and telephone numbers)

Return to child care: In most cases, a child may return to child care after a diarrheal illness once he or she is **free of fever** and the **diarrhea has ceased**.

***E.COLI* O157:H7**

Escherichia (E.) coli bacteria are found in the intestines of most humans and many animals. These infections are usually harmless. However, certain strains of the bacteria such as the O157:H7 can cause severe illness. Some persons who are infected with *E. coli* O157:H7
may have a mild disease while others develop a severe, bloody diarrhea. In some cases, the infection may cause a breakdown of the red blood cells which can lead to HUS or hemolytic uremic syndrome.

Mode of transmission: *E. coli* O157:H7 is usually the result of eating undercooked meat, especially hamburger. There have also been cases reported from drinking **unpasteurized** apple juice. Person-to-person transmission may occur by contact with the feces or stool of an infected person.

Notification: Notify the staff and parents/guardians that a case of *E. coli* O157:H7 has occurred and ask that they have their child evaluated by a physician if they have diarrhea, especially bloody diarrhea. *E. coli* O157:H7 is a Class I reportable disease and a follow-up investigation will be done by the Health Department.

Return to child care: The **infected child should not be in or allowed to return to a child care center until his/her diarrhea has ceased and 2 consecutive negative stool samples are obtained** (collected not less than 24 hours apart and not sooner than 48 hours after the last dose of antibiotics).

FIFTH DISEASE (ERYTHEMA INFECTIOSUM)

This is an infectious disease characterized by a “slapped -face” (redness) appearance of the cheeks followed by a rash on the trunk and extremities.

Mode of transmission: Person-to-person spread by direct contact with nose and throat secretions of an

infected person. Transmission of infection can be lessened by routine hygienic practices which include hand washing and the proper disposal of facial tissues containing respiratory secretions.

Notification: Notify parents/guardians and staff members that fifth disease is occurring in the child care facility. Staff members who are pregnant should consult their obstetrician if children in their room have fifth disease.

Return to child care: Children with fifth disease may attend child care if they are **free of fever**, since by the time the rash begins they are no longer contagious. The rash may come and go for several weeks.

"FLU" (INFLUENZA)

Influenza is an acute (sudden onset) viral disease of the respiratory tract characterized by fever, headache, muscle aches, joint pain, malaise, nasal congestion, sore throat and cough. Influenza in children may be indistinguishable from diseases caused by other respiratory viruses.

Mode of transmission: Direct contact with nose and throat secretions of someone who has influenza - airborne spread by these secretions coughed into the air.

Return to child care: The child may return to child care when **free of fever** and feeling well. The closing of individual schools and child care centers has not proven to be an effective control measure. By the time absenteeism is high enough to warrant closing, it is too late to prevent spread.

HAND-FOOT- AND- MOUTH DISEASE

This is a common childhood disease caused by a strain of coxsackievirus. In some people, the virus causes mild to no symptoms. In others, it may result in painful blisters in the mouth and on the palms of the hands and the soles of the feet.

Mode of transmission: The virus can be spread through saliva from the blisters in the mouth and from the fluid from the blisters on the hands and feet. It is also spread through the feces or stool of an infected person.

Notification: Notify parents/guardians and staff that there are cases of hand-foot-and-mouth disease in the child care facility so that they can be alert to the signs and symptoms.

Return to child care: The virus may be excreted in the stool for weeks after the symptoms have disappeared. **Children who have blisters in their mouths and drool or who have weeping or active lesions/blisters on their hands should be excluded from child care until the lesions are crusted and dry and the child is free of fever.**

HEAD LICE

This is an infestation of the scalp by small "bugs" called lice. They firmly attach egg sacs called "nits" to the hairs, and these nits are difficult to remove. Treatment may be accomplished with prescription or over-the-counter medicines applied to the scalp.

Mode of transmission: Direct contact with an infested person's hair (head-to-head) and, to a lesser extent, direct contact with their personal belongings, especially shared clothing and headgear. Head lice do not jump or fly from one person to another, but they can crawl very quickly when heads are touching.

Notification: When a case of head lice occurs in a room, notify the parents/guardians that a case of head lice has occurred. Check the other children in that room for head lice and if found, notify their parents/.guardians that the child needs treatment. Ask the parents/guardians to be alert to anyone in their family who may have signs and symptoms of head lice (e.g., excessive itching of the scalp, especially at the nape of the neck and around the ears) so that they may also receive treatment.

Infants and children less than 2 yrs. of age: It is a rare occurrence for children in this age group to have head lice. It is generally not recommended to treat this age group prophylactically or just because someone else in the family has been treated. If a child of this age is found to have head lice, the parent/guardian should consult the child's physician for treatment recommendations.

Return to child care: The child may return to child care after the first treatment has been given. **(See Attachment A - " Recommendations for the Control of Head Lice in the Child Care Setting")**

HEPATITIS A

This is an infectious viral disease characterized by jaundice (yellowing of the eyes and skin), loss of appetite, nausea, and general weakness. Child care centers can be a major source of hepatitis A spread in the community. This is because small children usually do not show any specific signs and symptoms of the disease. Symptomatic illness primarily occurs among adult contacts of infected, asymptomatic children.

Mode of transmission: Hepatitis A virus is found in the stool of persons infected with hepatitis A. The virus is usually spread from person to person by putting something in the mouth that has been contaminated with the stool of an infected person; for this reason, the virus is more easily spread under poor sanitary conditions, and when good personal hygiene, **especially good handwashing**, is not observed. Rarely, the virus is contracted by eating raw seafood (e.g., raw oysters) that has been collected from contaminated waters.

Notification: Notify the staff and parents/guardians that a case has occurred. Hepatitis A is a Class I reportable disease. A follow-up investigation will be done by the MSDH to determine who in the center may need to receive preventive treatment.

Return to child care: The child may return to child care one week after the onset of jaundice (yellowing of the eyes and skin) or one week after the onset of other signs and symptoms if no jaundice is present.

HEPATITIS B

Hepatitis B is a viral disease that affects the liver. It is a contagious condition characterized by loss of appetite, abdominal discomfort, jaundice (yellowing of the eyes and skin), joint aches, and fever in some cases. It is different from Hepatitis A. There should not be any risk of exposure to hepatitis B in a normal child care setting unless a child who is infected with hepatitis B is bleeding. Also, since the hepatitis B vaccine is now a part of the routine immunization schedule, more and more children should be immune.

Mode of transmission: The most common mode of transmission is through having sex with someone who has the virus; however, it can be transmitted when infected blood enters the body through cuts, scrapes or other breaks in the skin. Injecting drug users are at risk when they share needles with an infected person. It is also possible for infected pregnant women to transmit the virus to their babies during pregnancy or at delivery.

If an exposure to a person who is infected with hepatitis B has occurred, the person exposed should be referred to his/her physician since hepatitis B vaccine and hepatitis B immune globulin may be indicated. **Since hepatitis B and HIV/AIDS are both transmitted through blood exposure, the precautionary measures for HIV/AIDS would also apply to hepatitisB. (See HIV/AIDS section below)**

HEPATITIS C

Hepatitis C is also a viral disease that affects the liver. Again, hepatitis C should pose no risk of exposure in the normal child care setting unless the infected child is bleeding. There is no vaccine available for hepatitis C at this time. **Since it is also transmitted through blood exposure, the same precautionary measures for hepatitis B and HIV/AIDS would be apply to hepatitis C. (See HIV/AIDS section below)**

HUMAN IMMUNODEFICIENCY VIRUS (HIV) INFECTION/ ACQUIRED IMMUNODEFICIENCY SYNDROME (AIDS)

Mode of transmission: The most common mode of transmission is through having sex with someone who has the virus; however, it can be transmitted when infected blood enters the body through cuts, scrapes or other breaks in the skin. Injecting drug users are at risk when they share needles with an infected person. It is also possible for infected pregnant women to transmit the virus to their babies during pregnancy or at delivery. Although HIV and hepatitis B are transmitted in the same way, HIV is much more difficult to transmit from one person to another than hepatitis B.

HIV infection in children causes a broad spectrum of disease manifestations and a varied clinical course. Children with HIV infection should be monitored closely by their physician. They are more susceptible to infectious diseases than other children. Parents of children known to have HIV infection should be notified when certain infectious diseases occur in the child care facility. There is no vaccine available for HIV at this time. According to CDC, HIV is not likely to be spread from one child to another in the child care setting and no case has ever been reported. Parents or guardians of HIV-positive children should inform the child care director of their child's HIV status. Because of concern over stigmatization, the person aware of a child's HIV infection should be limited to those who need such knowledge to care for the children in the child care setting. In a situation where there is concern of possible exposure of

others to the blood or body fluids of an infected person, CDC recommends that a team including the child's parents or guardians, the child's physician, public health personnel, and the proposed child care provider evaluate the situation to determine the most appropriate child care setting. The team should weigh the risks and benefits to both the infected child and to others in the child care setting.

It should always be remembered that there those who are known to be infected with HIV, hepatitis B and C and other blood borne diseases, but on the other hand there are those we do not know about and some people are not even aware themselves that they may have an infectious blood borne disease. Therefore, we must always employ universal precautions (treating everyone's blood as though it is infectious) when dealing with blood and body fluids. There is no evidence that HIV, hepatitis B or hepatitis C is transmitted through tears, perspiration, urine or saliva unless these body fluids contain visible blood.

Child care providers should be prepared to handle blood and blood-containing body fluids using the principles of universal precautions. Supplies of gloves, disposable towels and disinfectants should be readily available.

The Mississippi State Department of Health is available for consultation in these situations.

IMPETIGO

This is a contagious skin disease characterized by spreading pustular lesions (sores with pus) and should receive medical treatment. This is quite important to avoid the risk of complications involving the heart and kidneys.

Mode of transmission: Skin-to-skin contact with the sores.

Return to child care: The child may return to child care 24 hours after treatment has been started if free of fever and the lesions are not draining.

MEASLES

Measles is a serious viral infection characterized by a rash (red, flat lesions) starting on the head and neck, which enlarge and coalesce (run together), and spread to the trunk, then to the extremities. Other symptoms include a high fever, conjunctivitis (red, inflamed eyes), cough and nasal congestion. The Health Department must be notified on first suspicion. With our present immunization laws, measles is a rare occurrence today. It is imperative, however, that immunization records be kept current.

Mode of transmission: Direct contact with nose and throat secretions of an infected person. May be airborne by droplets of these secretions coughed into the air. Tiny droplets can be suspended in the air for two hours or more. Measles is very easily spread.

Notification: Notify staff and parents/guardians that a case has occurred. Measles is a Class I reportable disease and there will be a follow-up investigation by the Health Department. Parents of children with weakened immune systems (those being treated for cancer, leukemia or taking steroid medication, etc.) should consult their child's physician and keep the child out of the center until after the investigation by the Health Department and it is considered safe for them to return.

Return to child care: The child may return to child care when free of fever and the rash is fading (this usually takes 5-7 days).

MENINGITIS

Meningitis is an inflammation or infection of the meninges (the membranes that cover the brain and spinal cord). Meningitis can be caused by a variety of organisms or germs. Most people exposed to these germs do not develop meningitis or serious illness. Some people may carry a particular germ and have no symptoms at all. Anyone exhibiting signs and symptoms of meningitis (e.g., severe headache, fever, vomiting, stiffness and pain in the neck, shoulders and back, drowsiness) should seek medical attention promptly.

Meningitis is a reportable disease. The Department of Health evaluates each case individually to determine what public health intervention, if any, might be required. The two types of meningitis that require public health intervention most often are caused by the organisms *Haemophilus influenzae* type b (HIB) and *Neisseria meningitidis* (meningococcal).

Mode of transmission: These germs are most commonly spread by direct contact with nose and throat secretions from a infected person.

Notification: Notify parents/guardians that a case has occurred and to have their children evaluated by a physician should they have any of the signs or symptoms listed above.

Return to child care: The child may return to the center whenever he or she has been released by his/her personal physician.

MUMPS

Mumps is an infectious disease that is characterized by swelling and pain of the salivary glands.

Mode of transmission: Person- to- person spread by direct contact with the saliva of an infected person.

Return to child care: The child may return to child care 9 days after the beginning of the salivary gland swelling.

"PINK EYE" (CONJUNCTIVITIS)

This is an infectious disease characterized by redness of the eye(s), excessive tearing, itching, and discharge. Some cases may require antibiotics; therefore, the child should see a physician.

Mode of transmission: Contact with discharges from the eye, nose or throat of an infected person. Also, from contact with fingers, clothing and other articles that have been contaminated with the discharge.

Return to child care: Children may return to child care after they have seen a physician or when the redness/discharge is improving.

PINWORMS

Pinworms are tiny worms that live in the large intestine and can cause anal itching, sleeplessness and irritability. They may also be present without any symptoms. Pinworms occur worldwide and affect all socioeconomic classes. They are the most common worm infection in the United States. Prescription medication must be obtained to treat the infection.

Mode of transmission: Pinworms can be spread when an uninfected person touches the anal area of an infected person and then puts their hands/fingers in their mouth. They can also be spread when an infected person scratches the anal area and then contaminates food or other objects that are touched or eaten. Pinworms can be spread as long as the worms or the eggs are present.

Return to child care: The child may return to child care **24** hours after they have received the first treatment. Employ **thorough hand washing** especially before eating and after toilet use and change and wash any bed linens and towels in hot water that have been used for those children. Ask the parents/guardians to do the same at home. Also, discourage children from scratching the anal area.

RESPIRATORY SYNCYTIAL VIRUS (RSV)

RSV can cause an upper respiratory disease like a cold or a disease of the lower respiratory tract such as pneumonia. It is the most common cause of lower respiratory tract infections and pneumonia in infants and children under the age of 2. Almost 100% of children in child care programs get RSV during the first year of life. This usually occurs during outbreaks in the winter months. RSV can range from a very mild disease to life-threatening.

Mode of transmission: Direct contact with nose and throat secretions of an infected person. A young child can be infectious with RSV 1 to 3 weeks after signs and symptoms have subsided.

Return to child care: Most of the time a child is infectious before signs and symptoms appear. An infected child does not need to be excluded from child care unless he/she has a fever and/or is not well enough to participate in the activities. Make sure that **procedures pertaining to hand washing, proper disposal of tissues and disinfection of toys are followed.**

RINGWORM

Ringworm is a skin infection caused by a fungus that can affect the scalp, skin, fingers, toe nails and feet. Ringworm anyplace except on the scalp or under the nails can be successfully treated with several over-the-counter medicines. Ringworm of the scalp is characterized by inflammation, redness, and hair loss and does not respond to over-the-counter medicines; therefore, the child should see his/her physician.

Mode of transmission: Direct skin-to-skin contact or indirect contact (e.g., toilet articles such as combs and hair brushes, used towels, clothing and hats contaminated with hair from infected persons or animals).

Notification: When the lesions (red, circular places) are found, notify the parent/guardian that the child needs treatment.

Return to child care: The child may return to child care after the treatment has been started. Treatment for ringworm of the scalp and nails usually lasts for several weeks. Strict infection control measures should be taken (e.g., blankets, towels or anything that is used on the infected child should not be used on another child, make sure that staff caring for these children **practice good handwashing** and that disinfecting procedures are followed.

SCABIES

Scabies is a disease of the skin caused by a mite. The mite burrows beneath the skin and causes a rash that is usually found around finger webs, wrists and elbows. The rash may appear on the head, neck and body on infants. Any child with evidence of severe itching especially in these areas should be referred to his/her physician. Scabies requires treatment by prescription drugs.

Mode of transmission: Direct skin-to-skin contact with an infested person. Transfer of the mites from undergarments and bedclothes can occur, but only if contact takes place immediately after the infested person has been in contact with the undergarments and bedclothes.

Notification: Notify parents/guardians and staff that scabies has occurred in the facility so that they can be alert to signs and symptoms and seek treatment.

Return to child care: The child may return to child care 24 hours after the treatment has been completed. It must be noted that itching may continue for several days, but this does not indicate treatment failure or that the child should be sent home.

"STREP THROAT" (STREPTOCOCCAL PHARYNGITIS) & SCARLET FEVER

Strep throat is a communicable disease characterized by sore throat, fever, and tender, swollen lymph glands in the neck. The child should see a physician to obtain prescription medication; this is quite important to avoid the risk of complications involving the heart and kidneys. **Scarlet fever** is a streptococcal infection with a rash (scarlatinaform rash). It is most commonly associated with strep throat. In addition to the signs and symptoms of strep throat, the person with scarlet fever has an inflamed, sandpaper-like rash and sometimes a very red or "strawberry" tongue. The rash is due to a toxin produced by the infecting strain of bacteria. The treatment and exclusion criteria for scarlet fever would be the same as for strep throat.

Mode of transmission: Direct or indirect contact (e.g., contaminated hands, drinking glasses, straws) with throat secretions of an infected person.

Return to child care: The child may return to child care **24** hours after treatment has been started **if free of fever**.

TUBERCULOSIS (TB)

Mode of transmission: Airborne droplets of respiratory secretions coughed or sneezed into the air by a person with active TB disease.

Notification: TB is a class one reportable disease. If a child or a staff member in a child care facility is diagnosed with active TB, the MSDH will conduct an investigation. The MSDH will notify the facility and the parents/guardians of the type of follow-up that will be necessary.

Return to child care: Persons diagnosed with TB infection are evaluated by the Mississippi State Department of Health on an individual basis. Those who have a positive TB skin test *only* may attend child care since they have no disease process that is contagious. **Persons suspected of or diagnosed with active TB disease will need written permission from the Mississippi State Department of Health Tuberculosis Control Program to return to the center.**

Small children are highly susceptible to contracting TB disease, but do not transmit the disease as easily as an older child or adult. Children who do not have active TB disease, but who have been exposed to an active case in their household are considered high risk contacts and are placed on preventive medication. These children may attend child care since they are not infectious.

WHOOPING COUGH (PERTUSSIS)

Pertussis or whooping cough is a contagious disease characterized by upper respiratory tract symptoms with a cough, often with a characteristic inspiratory (breathing in) whoop.

Mode of transmission: Direct or indirect contact (contaminated articles) with nose and throat secretions of an infected person. Airborne transmission can also occur by droplets of these secretions coughed into the air.

Notification: Notify parents/guardians that a case has occurred. Pertussis is a class one reportable disease. The Health Department will conduct an investigation to determine those who may need preventive treatment.

Return to child care: The child may return to child care 5 days after their treatment has begun.

E X A M P L E

PERMISSION TO COLLECT STOOL SPECIMENS AND RECEIVE TEST RESULTS

If and when an outbreak of diarrheal diseases such as giardiasis, salmonellosis, shigellosis, etc. occurs in a child care facility, the Mississippi State Department (MSDH) investigates and may request that stool specimens be collected. In an outbreak situation, the stool specimen collection bottles are provided by the MSDH and the tests are done in the MSDH Lab free of charge. The collection bottle, with instructions, would either be given to the parent/guardian to collect the stool specimen or it may need to be collected at the child care facility. The child care facility would receive the test results and recommendations would be made by the MSDH. The test results would be given to the parents/guardians by the child care facility and the parents/guardians should give them to their child's physician.

I give my permission for (name of child care facility) to collect stool specimens from (name of child) when it is recommended by the MSDH and also for them to receive the test results. I understand that I will receive a copy of the test results and be informed of the recommendations made by the MSDH.

Date _____

Parent/Guardian

E X A M P L E

ATTACHMENT - A

APPENDIX I-21

This page intentionally left blank

RECOMMENDATIONS FOR THE CONTROL OF HEAD LICE IN THE CHILD CARE SETTING

Head lice, *Pediculus humanus capitis*, are a common problem in children who attend child care in Mississippi. Although they do not transmit any human disease, they may be a considerable nuisance, and require conscious effort on the part of the child care staff and parents to control. **It should be understood that head lice can only be controlled in the child care center, not eliminated; they will occur sporadically, and will recur even after control efforts. The goal of control efforts is to reduce the problem and its impact, and minimize spread.**

Head lice are not a product of poor personal hygiene or lack of cleanliness, and their presence is not a reflection on the child care center or the family. More harm is probably caused by misconceptions about head lice than by the lice themselves.

1. IDENTIFYING INFESTED CHILDREN

By Screening: It is important to establish a screening program. Children should be screened for head lice upon entry into the child care setting and periodically during the year. Staff members should be instructed in the technique of detecting head lice.

By Individual Case: Any child suspected of having head lice (usually because he/she is scratching his/her head a lot) should be examined by a staff member who has been instructed in the technique. If infested, the child should be handled as described in Section 2, "HANDLING OF INFESTED CHILDREN."

If one child in a room is found to be infested, the whole room should be screened.

2. HANDLING OF INFESTED CHILDREN

Exclusion: An infested child's parent/guardians should be notified that the child has been found to have head lice and must receive the proper treatment before returning to child care. Treatment and removal of nits are described in Section 3, "TREATMENT." Care must be taken not to embarrass or stigmatize the child.

Return to Child Care: The child should return to the child care center as soon as the first treatment has been given. **Nits (eggs) may still be seen even in an adequately treated child. This is not evidence of continuing infestation if the child has been properly treated and no adult lice are present.**

3. TREATMENT

Individual: Several effective pediculicides (lice-killing products) are available such as Nix®* (permethrin) creme rinse (10 minute hair rinse) which is available over the counter and has ovicidal (egg

or nit-killing) capability. It is the only over-the-counter pediculicide covered by Medicaid. The pyrethrin/pyrinate products (10 minute shampoos) include such products as Rid®*, A-1000®*, R&C®*, Clear®* and Triple-X®* and are available over the counter at pharmacies. Kwell®* (1% lindane), a 4 minute shampoo, requires a prescription. Central nervous system toxicity with lindane has been documented with prolonged administration.
Ovide®* lotion (Malathion 0.5%) has been re-approved by the Food and Drug Administration (FDA) as a prescription drug for the treatment of head lice infestation in the United States. Treatment with any approved pediculicidal (lice-killing) product should be adequate.

One Treatment vs. Two Treatments: Most products require 2 treatments. An initial treatment will kill adult and larval lice, but will not kill all the eggs. **A second treatment 7 to 10 days later, after the eggs left by the first treatment have all hatched, will kill the newly hatched lice <u>before they mature and reproduce</u> and will complete the treatment process.** Nix®* requires only one treatment since it is an ovicidal (also kills the eggs or nits); however, a second treatment is desirable since the product is not likely to kill 100% of the nits. Ovide®* lotion is also ovicidal and requires a second treatment 7 to 10 days after the first one **only** if crawling lice are seen.

Retreatment: Pediculicides should kill lice soon after application. However, in some situations (e.g., a person is too heavily infested, pediculicide is used incorrectly, reinfestation or possible resistance to the medication), the lice may still be present. Immediate retreatment with a **different class or type** of pediculicide is generally recommended if live lice are detected on the scalp 24 hours or longer after the initial treatment.

Treatment of Infants and Children Less Than 2 Years of Age: It is a rare occurrence for children in this age group to have head lice. It is generally not recommended to treat this age group preventively or just because someone else in the family has been treated. If a child of this age is found to have head lice, the parent/guardian should consult the child's physician for treatment. The safety of head lice medications has not been tested in children 2 years of age and under.

Removal of nits: The need to remove nits is somewhat controversial. However, removing the nits may prevent reinfestation by those nits hatching that may have been missed by the treatment. It may also decrease confusion about infestation when the person who has been treated is being re-examined for the presence of head lice, and it will avoid possible embarrassment to the infested child. Nits may be removed by the use of a nit comb or by manually ("nit-picking") removing them. Most of the nits that are easily seen and more easily removed with the nit comb are those that are grayish-white in color, have grown out one or more inches on the hair shaft and have already hatched. The new, viable nits are closer to the scalp (within about 1/4 inch) and are more of a brownish color. These nits are firmly attached to the hair shaft with a glue-like substance. There are commercial products available to help loosen the glue-like substance for easier removal.

Family: Household members of a child with head lice should be examined for lice (by a family member who knows how or someone else knowledgeable about lice) and any infested persons treated as described above. **The one exception is any person over 2 years of age who shares a bed with the infested child should simply be treated presumptively.** If the child is less than 2 years of age, consult

the child's physician for treatment recommendations.

4. ENVIRONMENTAL CONTROL

Child Care Facility/Household: Clothing, cloth toys, and personal linens (such as towels and bedclothes used within the previous 48 hours by an infested person) can be disinfected by washing in hot water and drying in the dryer using hot cycles. Non-washables should be dry cleaned, or stored in air-tight plastic bags for 2 weeks. Spraying with insecticides is **NOT** recommended. Fumigants and room sprays can be toxic if inhaled or absorbed through the skin. If there are cloth surfaces, such as furniture or carpet, with which the infested person's hair has had extensive contact, they should be **vacuumed** thoroughly. The head louse will not survive off the human scalp for more than 24 - 48 hours.

****

Questions about control methods, specific treatments, or special problems can be addressed to the local health department, the district public health office, or to the Office of Community Health Services - Division of Epidemiology, State Department of Health in Jackson.

****

(*Use of specific product names is for example purposes only, and is not intended as endorsement of specific brands over others.)

SAMPLE LETTER TO PARENTS/GUARDIANS

Dear Parent or Guardian:

Your child _____ has been found to have head lice. Head lice do not transmit disease and they are not a result of lack of cleanliness. Children in child care settings get them commonly, sometimes more than once.

You should consult a pharmacist or your child's physician for a recommendation as to which of several effective products to use to treat your child. **As soon as you have treated your child with an approved pediculicidal (lice-killing) product, he or she may return to child care.**

There are 3 steps in the successful management of head lice:

1. Treatment (killing the lice with an approved medical treatment) - It is very important to follow the instructions given by your physician when using prescription medication. If you use over-the-counter medication, you should follow the package directions. The other members of your family should be checked for head lice and treated if they are found to have them. Persons over 2 years of age who sleep in the same bed with the infested child should be treated regardless. If a child less than 2 years of age is found to have head lice, consult the child's physician for treatment recommendations.

2. Removal of the nits - The Mississippi State Department of Health recommends that you attempt to remove the nits to avoid reinfestation by those nits hatching that may have been missed by the treatment. The nits can be removed by dividing the hair into sections and working each section separately. Look for small grayish-white or yellowish-brown specks that are attached to the hair shaft close to the scalp. Nits are attached to the hair shaft very firmly with a glue-like substance and are not easily brushed out. They must be picked out with the fingernails or combed with the nit comb that usually comes with the lice-killing product. This can be done outdoors under bright sunlight or indoors with a good reading lamp as nits are sometimes hard to see.

3. Environmental control - Clothing and personal linens (such as towels and bedclothes used by infested persons) should be machine washed using hot water and dried using the hot cycle. Non-washables can be dry cleaned or stored in an air-tight plastic bag for 2 weeks. Cloth-covered furniture and carpet that have been in extensive contact with an infested person's head should be thoroughly vacuumed. Lice-killing sprays are generally not necessary.

Signature: _____ Date